CONTIMAC pro equipment

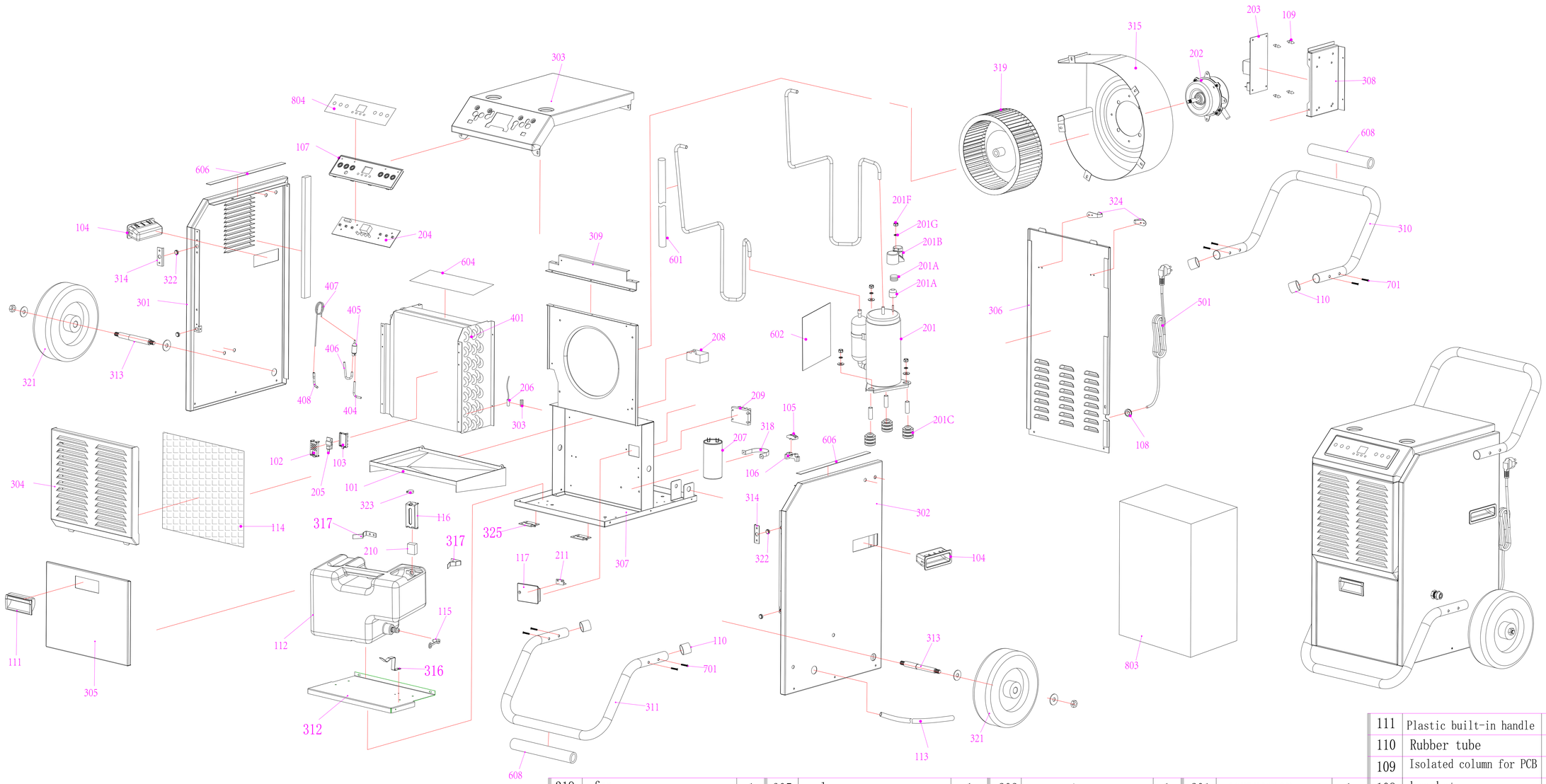

序号	名 称	数量
804	key panel	1
803	Carton	1
701	Screw M6x36	8
608	rubber sheath	2
606	foam	2
605	foam	1
604	foam for heat exchanger	1
603	foam for air outlet	1
602	foam for compressor	1
601	heat preservation	1
501	power cord	1
408	capillary outlet tube	1

NO	name	qty
407	capillary	1
406	fill-in tube	1
405	three-way filter	1
404	liquid inlet tube	1
403	low-pressure tube	1
402	high-pressure tube	1
401	cold-heat exchanger	1
325	stainless steel hinge	2
324	hanger	2
323	pipe hoop	1
322	magnet	4
321	wheel	4

no	name	qty
319	fan	1
318	clip for capacitance	1
317	Bucket under spacers	1
316	Bucket spacers	2
315	coat for fan	2
314	batten for magnet	2
313	shaft for wheel	2
312	Bucket supporting plate	1
311	Pipe racks	1
310	Round pipe pushing hands	1
309	sealed plate for fan	1
308	Fixed shelf for PCB	1
307	base	1
306	back plate	1

no	name	qty
305	lower cover	1
304	air inlet	1
303	upper cover	1
302	right side plate	1
301	left side plate	1
211	Magnetic control switch	1
210	Floater	1
209	terminal	1
208	motor capacitance	1
207	compressor capacitance	1
206	5k Temp sensor	1
205	humidity sensor	1
204	key board	1
203	pcb	1

no	name	qty
202	motor	1
201G	washer	1
201F	nut	1
201E	spring washer	1
201D	washer	1
201C	anti vibration pad	3
201B	cover	1
201A	Overload protection	1

no	name	qty
201	compressor	1
117	Magnetic control switch fixed plate	1
116	Floater fixed holder	1
115	Rubber water plug	1
114	Filter	1
113	outlet pipe	1
112	Bucket	

no	name	qty
111	Plastic built-in handle	1
110	Rubber tube	4
109	Isolated column for PCB	1
108	bracket	1
107	control panel	1
106	wire block floor	1
105	wire block cover	2
104	hand dug for air inlet	1
103	Induction box floor	1
102	Induction box cover	1
101	Water Tray	1

Oulun

design		stand		name	
draw		audit		no	
verify		approve		name	
art		date		mateiral / product	ratio / qty

name

unit mm

weight

view

A4