Chicago Pneumatic
Oil-injected compressors

CPBg 20, CPBg 25, CPBg 29, CPBg 34, CPVSd 21, CPVSd 25, CPVSd 29, CPVSd 34

Parts List

Chicago Pneumatic

Chicago Pneumatic

Oil-injected compressors

CPBg 20, CPBg 25, CPBg 29, CPBg 34, CPVSd 21, CPVSd 25, CPVSd 29, CPVSd 34

Parts List

• Copyright, Chicago Pneumatic Compressors, Rock Hill, USA.
Any unauthorized use or copying of the contents or any part thereof is prohibited. This applies in particular to trademarks, model denominations, part numbers and drawings.
• Use only authorized parts. Any damage or malfunction caused by the use of unauthorized parts is not covered by Warranty of Product Liability.

04/04/2019
No. 2930 7170 20
www.cp.com

Chicago Pneumatic

Instructions 4
1 Service Kits 18
2 Oil 24
3 Drivetrain CPBg 20-34 - Gear driven 26
4 Drivetrain CPVSd 21-34 - Direct driven 28
5 Motor assembly CPBg 20-34 - Gear driven 30
6 Motor assembly CPVSd 21-34 - Direct driven 32
7 Gear set - for gear driven units 34
8 Air system 36
8.1 Air filter 36
8.2 Air inlet 38
8.3 Regulation valve 40
8.4 Separation 44
9 Cooling system CPBg 20-34 - Gear driven 52
10 Cooling system CPVSd 21-34 - Direct driven 54
11 Liquid filtration 56
12 Air receiver AS1210, CE, MOM, SA 58
13 Air receiver ASME, CRMASME 60
14 Air outlet CPBg 20, CPBg 25, CPVSd 21, CPVSd 25 - Floor-mounted - Without dryer 62
15 Air outlet CPBg 29, CPVSd 29 - Floor-mounted - Without dryer 64
16 Air outlet CPBg 34, CPVSd 34 - Floor-mounted - Without dryer 66
17 Air outlet CPBg 20, CPBg 25, CPVSd 21, CPVSd 25 - Tank-mounted - Without dryer 68
18 Air outlet CPBg 29, CPVSd 29 - Tank-mounted - Without dryer 70
19 Air outlet CPBg 34, CPVSd 34 - Tank-mounted - Without dryer 72
20 Air outlet CPBg 20, CBPg 25, CPVSd 20, CPVSd 25 - Floor-mounted - With dryer 74
21 Air outlet CPBg 29, CPVSd 29 - Floor-mounted - With dryer 76
22 Air outlet CPBg 34, CPVSd 34 - Floor-mounted - With dryer 78
23 Air outlet CPBg 20, CPBg 25, CPVSd 21, CPVSd 25 - Tank-mounted - With dryer 80
24 Air outlet CPBg 29, CPVSd 29 - Tank-mounted - With dryer 82
25 Air outlet CPBg 34, CPVSd 34 - Tank-mounted - With dryer 84
26 Loose parts IEC 86
27 Loose parts UL-cUL - Floor-mounted - Without dryer 88
28 Loose parts UL-cUL - Tank-mounted - Without dryer 90
29 Loose parts UL-cUL - Floor-mounted - With dryer 92
30 Loose parts UL-cUL - Tank-mounted - With dryer 94
31 Air dryer 96
31.1 Assembly CPBg 20, CPVSd 21 - IEC - AS1210, ASME, CE, MOM, SA 96
31.2 Assembly CPBg 25, CPVSd 25, CPBg 29, CPVSd 29, CPBg 34, CPVSd 34 - IEC - AS1210, ASME, CE, MOM, SA 98
31.3 Assembly CPBg 20, CPVSd 21 - UL-cUL - ASME 100

31.4 Assembly (CRNASME, (CPBg 25, CPVSd 25, CPBg 29, CPVSd 29, CPBg 34, CPVSd 34 - ASME)) - UL-cUL..... 102
31.5 Components CPBg 20, CPVSd 21 - IEC - 50Hz - AS1210, CE, MOM, SA..... 104
31.6 Components CPBg 25, CPVSd 25, CPBg 29, CPVSd 29, CPBg 34, CPVSd 34 - IEC - 50Hz - AS1210, CE, MOM, SA..... 108
31.7 Components CPBg 20, CPVSd 21 - IEC - 60Hz - ASME..... 112
31.8 Components CPBg 25, CPVSd 25, CPBg 29, CPVSd 29, CPBg 34, CPVSd 34 - IEC - 60Hz - ASME..... 116
31.9 Components CPBg 20, CPVSd 21 - UL-cUL - 60Hz - ASME..... 120
31.10 Components CPBg 25, CVPSd 25, CPBg 29, CPVSd 29, CPBg 34, CPVSd 34 - UL-cUL - 60Hz - ASME..... 124
31.11 Components UL-cUL - 60Hz - CRNASME..... 128
31.12 Dryer rail IEC - AS1210, CE, MOM, SA - 50Hz, ASME - 60Hz..... 132
31.13 Dryer rail UL-cUL - 60Hz - ASME..... 134
32 Regulation CPBg 20-34 - Gear driven – (AS1210, ASME, CE, MOM, SA – 400V), (CE – 230V), (ASME – 200230460V, 230V, 380V, 440V), (CRNASME – 575V), (CRNASME – 200230460V – With dryer)..... 136
33 Regulation CPBg 20-34 - Gear driven - CRNASME - 200230460V - Without dryer..... 140
34 Regulation CPVSd 21-34 - Direct driven..... 142
35 Cubicle components CPBg 20-34 - 230V/50Hz - Gear driven..... 144
36 Cubicle components CPBg 20-34 - 230V/60Hz - Gear driven..... 148
37 Cubicle components CPBg 20-34 - 200230460V/60Hz - ASME - Gear driven..... 152
38 Cubicle components CPBg 20-34 - 200230460V - CRNSASME - Without dryer - Gear driven..... 158
39 Cubicle components CPBg 20-34 - 200230460V - CRNSASME - With dryer - Gear driven..... 164
40 Cubicle components CPBg 20-34 - 380V/60Hz, 440V/60Hz - Gear driven..... 170
41 Cubicle components CPBg 20-34 - 400V/50Hz - Gear driven..... 174
42 Cubicle components CPBg 20-34 - 575V/60Hz - Without dryer - Gear driven..... 178
43 Cubicle components CPBg - 20-34 - 575V/60Hz - With dryer - Gear driven..... 182
44 Cubicle components CPVSd 21-34 - 380V/60Hz - Direct driven..... 188
45 Cubicle components CPVSd 21-34 - 400V/50Hz - Direct driven..... 192
46 Cubicle components CPVSd 21-34 - 440V/60Hz - Direct driven..... 196
47 Cubicle components CPVSd 21-34 - 460V/60Hz - ASME, (CRNASME - Without dryer) - Direct driven..... 200
48 Cubicle components CPVSd 21-34 - 460V/60Hz - CRNASME - With dryer - Direct driven..... 204
49 Bodywork..... 210
49.1 Internal CPBg 20-34 - Without dryer..... 210
49.2 Internal CPVSd 21-34 - Without dryer..... 212
49.3 Internal CPBg 20-34 - With dryer..... 214
49.4 Internal CPVSd 21-34 - With dryer..... 216
49.5 External CPBg 20-34 - Without dryer..... 218

49.6 External CPVSd 21-34 - Without dryer..... 220
49.7 External CPBg 20-34 - With dryer.....222
49.8 External CPVSd 21-34 - With dryer..... 224
50 Markings IEC..... 226
51 Markings UL-cUL.....228
52 Branding CPBg 20-34 - Without dryer..... 230
53 Branding CPBg 20-34 - With dryer..... 232
54 Branding CPVSd 21-34 - Without dryer..... 234
55 Branding CPVSd 21-34 - With dryer.....236

EN - English

1 ORDERING PARTS
Always specify the part number, the name and quantity of the required items, as well as the type and serial number of the machine.

2 COLUMN INFORMATION
Ref - Reference number: links a specific part from the list to the drawing. Only parts with a reference number are shown in the drawing. Parts in the drawing without a reference number are simply there to illustrate the assembly.
Part number - Part number to be used when ordering spare parts.
When no part number is specified, the component is not available as a spare part.
Parts which are contained in a kit will have the kit number mentioned on the line below. For complete content of the kit see chapter "1 - Service kits".
A part number preceded by a black dot is comprised in the assembly right above.
Remarks: Additional information to the part number right above.
Substituted by: The part number right above has been replaced by another part number due to an update or revision.
Qty - Quantity: Indicates the number of parts in relation to the corresponding reference number. „AR" means „As required": quantity or number to be determined.
Name - Part name: Translations of the English names can be found in document "Glossary of part names".
Validity - Defines the timeframe and type/version of the machines the part is valid for. Clarification of the codes used in the validity pattern can be found in the legend at the bottom of the page. A validity pattern mentioned in the chapter title applies to the whole chapter. A plus sign in the pattern is to be interpreted as 'and', a comma as 'or'. Parentheses group the validity codes, similarly to mathematical parentheses, see following example:
'PRESS:8BAR + (FREQ:50HZ+MOVOL:500V , FREQ:60HZ+MOVOL:575V)' is valid for machines with 8 bar working pressure and 50Hz frequency and 500V supply voltage, or 8 bar working pressure and 60Hz frequency and 575V supply voltage.
EL – Reference to the drawing or the component inside the electric cubicle.
R. – Remarks: Extra information about the part. Explanation can be found at the bottom of the page.

BG - български

1 ПОРЪЧКА НА ЧАСТИ
Винаги цитирайте номера на частта, наименованието и количеството на необходимите изделия, както и типа и серийния номер на машината.

2 ИНФОРМАЦИЯ В КОЛОНИТЕ
Ref - Референтен номер: свързва дадена част от списъка с чертежа. На чертежа са показани само части с референтен номер.
Частите на чертежа без референтен номер са там, единствено за да се покаже възелът.
Part number - Номер на частта, който да се използва при поръчката на резервни части.
Ако не е посочен номер на частта, компонентът не се предлага като резервна част.
Частите, които се съдържат в даден комплект, ще включват номер на комплекта на долния ред. За пълното съдържание на комплекта вижте глава „1 – Service kits".
Номер на част, пред който има черна точка, се съдържа във възела непосредствено по-горе.
Remarks: Допълнителна информация за частта – непосредствено по-горе.
Substituted by: Номерът на частта непосредствено по-горе е заменен от друг номер на частта поради актуализация или ревизия.
Qty - Количество: Посочва броя на частите във връзка със съответния референтен номер. „AR" означава „Според нуждата": количеството или броят ще бъдат определени допълнително.
Name - Име на частта: превод на английските имена можете да откриете в документа „Glossary of part names".
Validity - Определя периода и типа/версията на машините, за които частта е валидна. Обяснение на елементите от кода, използвани в кода за валидността, можете да откриете в легендата в долната част на страницата. Кодът за валидността, посочен в заглавието на главата, се отнася за цялата глава. Знакът плюс в кода се приема за „и", а запетаята – за „или". Скобите групират елементите на кодовете за валидност подобно на математическите скоби, вижте следния пример:
„PRESS:8BAR + (FREQ:50HZ+MOVOL:500V , FREQ:60HZ+MOVOL:575V)" е валидно за машини с работно налягане 8 bar, честота 50 Hz и захранващо напрежение 500 V или работно налягане 8 bar, честота 60 Hz и захранващо напрежение 575 V.
EL – Референция към чертежа или компонента в електрическата кутия.
R.. – Забележки: допълнителна информация относно частта. Обяснения можете да намерите в долната част на страницата.

BR - Brasileiro

1 ENCOMENDANDO PEÇAS
Sempre especifique o número da peça, o nome e a quantidade dos itens necessários, assim como o tipo e o número de série da máquina.
Páginas marcadas com o símbolo Serviço - " " contêm peças do(s) Kit(s) de serviço. Para conhecer o conteúdo completo do kit, consulte o capítulo "1 - Service kits" (1 - Kits de serviço).
2 INFORMAÇÕES SOBRE AS COLUNAS
Ref. - Número de referência: indica onde está uma peça específica listada no desenho. Somente peças com número de referência são mostradas no desenho. As peças no desenho que não têm um número de referência destinam-se simplesmente a ilustrar o conjunto.
Part number - Número da peça: se nenhum número de peça estiver especificado, o componente não está disponível como peça sobressalente. Uma linha mostrada em negrito é um conjunto. Uma peça cujo número seja seguido por um ponto preto faz parte do conjunto impresso em negrito imediatamente acima dela.
O símbolo "<<< >>>" direciona para outra lista com o mesmo título, como "Name" (Nome).
Quando o número de peça específico é colocado abaixo da linha "Ref."/"Name" (Ref. / Nome), é preciso escolher o tipo/versão da máquina.
Qty - Quantidade: indica o número de peças e os números de referência correspondentes. "AR" significa "As required" (Conforme solicitado): a quantidade ou o número a ser determinado.
Name - Nome da peça: as traduções dos nomes em inglês podem ser encontradas no documento "Glossary of part names" (Glossário de nomes de peças).
Remarks - Observações - Informações extras sobre a peça.
Uma série de letras pode indicar que uma determinada peça é certificada pelo órgão autorizado específico, de acordo com os códigos ou as regras da lista.
As medidas são fornecidas em milímetros.

CS - čeština

1 OBJEDNÁNÍ DÍLŮ
Vždy uveďte číslo dílu, název a množství požadovaných položek a také typ a sériové číslo stroje.

2 INFORMACE VE SLOUPCÍCH
Ref – Referenční číslo: Propojuje konkrétní díl ze seznamu s výkresem. Pouze díly s referenčním číslem jsou zobrazeny na výkresu. Díly bez referenčního čísla, které jsou na výkresu uvedeny, slouží pouze jako ilustrace.
Part number – Číslo dílu se používá pro objednávání náhradních dílů.
Pokud není uvedeno žádné číslo dílu, komponenta není k dispozici jako náhradní díl.
Díly obsažené v sadě mají na následujícím řádku uvedeno číslo sady. Úplný obsah sady viz kapitolu „1 – Service kits".
Díl s číslem, před kterým je černý puntík, je obsažen v sestavě přímo nad ním.
Remarks: Další informace k číslu dílu přímo nad ním.
Substituted by: Číslo dílu přímo nad ním bylo nahrazeno jiným číslem dílu v důsledku aktualizace nebo revize.
Qty – Množství: Indikuje počet dílů pro odpovídající referenční číslo. „AR" znamená „As required" (Podle potřeby): množství nebo počet bude určen.
Name – Název dílu: Překlady anglických názvů naleznete v dokumentu „Glossary of part names".
Validity – Definuje časový rámec a typ/verzi strojů, na které se daný díl vztahuje. Objasnění kódů použitých ve vzorci platnosti naleznete v legendě na konci stránky. Vzorec platnosti uvedený v názvu kapitoly se vztahuje na celou kapitolu. Znaménko plus ve vzorci se interpretuje jako „a" a čárka jako „nebo". Závorky seskupují kódy platnosti, obdobně jako matematické závorky, viz následující příklad:
„PRESS:8BAR + (FREQ:50HZ+MOVOL:500V , FREQ:60HZ+MOVOL:575V)" platí pro stroje s provozním tlakem 8 bar, frekvencí 50 Hz a napájecím napětím 500 V nebo pro stroje s provozním tlakem 8 bar, frekvencí 60 Hz a napájecím napětím 575 V.
EL – Reference na výkres nebo komponentě uvnitř elektrického rozvaděče.
R. – Poznámky: Doplňující informace o dílu. Vysvětlení naleznete na konci stránky.

DA - Dansk

1 BESTILLING AF DELE
Angiv altid styknummeret, navnet på og antallet af de ønskede varer samt typen og serienummeret for maskinen.

2 OPLYSNINGER TIL KOLONNERNE
Ref - Referencenummer: Knytter en bestemt del fra listen til tegningen. Kun dele med et referencenummer vises på tegningen. Dele på tegningen uden et referencenummer er blot medtaget for at vise samlingen.
Part number - Styknummer, der skal bruges ved bestilling af reservedele.
Hvis der ikke er angivet et styknummer, fås komponenten ikke som reservedel.
Dele, der er indeholdt i et sæt, har sætnummeret stående på linjen nedenfor. Se kapitel "1 – Service kits" for at få vist hele indholdet af sættet.
Et styknummer med en sort prik foran indgår i samlingen lige ovenfor.
Remarks: Der findes yderligere oplysninger til styknummeret lige ovenfor.
Substituted by: Styknummeret lige ovenfor er blevet erstattet af et andet styknummer i forbindelse med en opdatering eller en revidering.
Qty - Antal: Angiver antallet af dele, der hører til det tilsvarende referencenummer. "AR" står for "As required": Antallet eller nummeret skal fastsættes.
Name - Navn på del: Oversættelser af de engelske navne kan findes i dokumentet "Glossary of part names".
Validity - Angiver tidshorisont og maskintype/-version, som delen gælder for. Forklaringer til koderne, der anvendes i modellen for gyldigheden, kan findes i teksten nederst på siden. En model for gyldigheden, der er nævnt i kapitlets titel, gælder for hele kapitlet. Et plustegn i modellen skal fortolkes som et "og", og et komma som et "eller". Parenteser inddeler koderne, der beskriver gyldigheden, på samme måde som parenteser i matematik. Se følgende eksempel:
„PRESS:8BAR + (FREQ:50HZ+MOVOL:500V , FREQ:60HZ+MOVOL:575V)“ gælder for maskiner med et arbejdstryk på 8 bar, en frekvens på 50 Hz og en forsyningsspænding på 500 V eller for maskiner med et arbejdstryk på 8 bar, en frekvens på 60 Hz og en forsyningsspænding på 575 V.
EL – Refererer til tegningen eller komponenten inde i elskabet.
R. - Bemærkninger: Yderligere oplysninger om delen. Forklaringer kan findes nederst på siden.

DE - Deutsch

1 TEILE BESTELLEN
Geben Sie immer genau die Teilenummer, den Namen und die Anzahl des gewünschten Artikels und den Typ und die Seriennummer der Maschine an.

2 SPALTENINFORMATION
Ref - Referenznummer: Verknüpft ein spezifisches Teil der Liste mit der Zeichnung. Es werden nur Referenznummern in der Zeichnung gezeigt. In der Zeichnung dargestellte Teile ohne Referenznummer sind einfach nur zu Illustrationszwecken der Baugruppe abgebildet.
Part number - Die Teilenummer wird bei der Bestellung von Ersatzteilen angegeben.
Ist keine Teilenummer angegeben, ist die Komponente nicht als Ersatzteil verfügbar.
Bei Teilen, die zu einem Set gehören, wird die Setnummer unten auf der Linie angegeben. Zum kompletten Inhalt des Sets siehe Kapitel „1 – Service kits“.
Eine mit einem schwarzen Punkt versehene Teilenummer ist in dem direkt darüber stehenden Set enthalten.
Remarks: Zusätzliche Informationen zur Teilenummer stehen direkt darüber.
Substituted by: Die direkt darüber stehende Teilenummer wurde aufgrund einer Aktualisierung oder Überarbeitung durch eine andere Teilenummer ersetzt.
Qty - Anzahl: Gibt die Anzahl der Teile im Verhältnis zur entsprechenden Referenznummer an. „AR“ steht für „Nach Bedarf“: Anzahl oder Nummer muss noch angegeben werden.
Name - Teilename: Übersetzungen der englischen Bezeichnungen finden Sie im Dokument „Glossary of part names“.
Validity - Gibt den Zeitrahmen und den Typ/die Version der Maschine vor, für die die Teile gültig sind. Eine Erläuterung der Codes, die für das Gültigkeitsmuster angewandt werden, finden Sie am Fuß der Seite. Ein im Kapiteltitel genanntes Gültigkeitsmuster bezieht sich auf das gesamte Kapitel. Ein Pluszeichen im Muster steht für „und“, ein Komma für „oder“. Klammern fassen die Codes in Gruppen zusammen, ähnlich wie bei mathematischen Klammern. Siehe dazu folgendes Beispiel:
„PRESS:8BAR + (FREQ:50HZ+MOVOL:500V , FREQ:60HZ+MOVOL:575V)“ ist für Maschinen gültig mit 8 bar-Betriebsdruck, 50 Hz-Frequenz und 500 V-Versorgungsspannung oder 8 bar-Betriebsdruck, 60 Hz-Frequenz und 575 V-Versorgungsspannung.
EL – Referenz zu der Zeichnung oder dem Bauteil im Inneren des Schaltkastens.
R. – Anmerkungen: Zusatzinformationen zum Teil. Erklärungen finden Sie am Fuß der Seite.

EL - ελληνικά

1 ΠΑΡΑΓΓΕΛΙΑ ΑΝΤΑΛΛΑΚΤΙΚΩΝ
Πρέπει πάντα να προσδιορίζετε τον κωδικό εξαρτήματος, την ονομασία και την ποσότητα των απαιτούμενων ειδών, καθώς και τον τύπο και τον αριθμό σειράς του μηχανήματος.

2 ΠΛΗΡΟΦΟΡΙΕΣ ΓΙΑ ΤΙΣ ΣΤΗΛΕΣ
Ref - Κωδικός αναφοράς: συσχετίζει ένα συγκεκριμένο εξάρτημα από τη λίστα με το σχέδιο. Μόνο εξαρτήματα που έχουν κωδικό αναφοράς εμφανίζονται στο σχέδιο. Τα εξαρτήματα στο σχέδιο που δεν έχουν κωδικό αναφοράς, υπάρχουν απλώς για την εικονογράφηση του συγκροτήματος.
Part number - Κωδικός εξαρτήματος, ο οποίος χρησιμοποιείται κατά την παραγγελία ανταλλακτικών.
Όταν δεν αναφέρεται κάποιος κωδικός εξαρτήματος, το εξάρτημα δεν διατίθεται ως ανταλλακτικό.
Για τα εξαρτήματα που περιέχονται σε κιτ, ο αριθμός του κιτ θα αναφέρεται στην παρακάτω γραμμή. Για το πλήρες περιεχόμενο του κιτ, βλ. κεφάλαιο "1 – Service kits".
Όταν μπροστά από τον κωδικό εξαρτήματος υπάρχει μια μαύρη κουκίδα, το εξάρτημα περιέχεται στο συγκρότημα που βρίσκεται ακριβώς από πάνω.
Remarks (Παρατηρήσεις): Πρόσθετες πληροφορίες για τον κωδικό εξαρτήματος ακριβώς από πάνω.
Substituted by (Έχει αντικατασταθεί από): Ο πιο πάνω κωδικός εξαρτήματος έχει αντικατασταθεί από άλλο κωδικό εξαρτήματος λόγω ενημέρωσης ή αναθεώρησης.
Qty - Ποσότητα: Δείχνει τον αριθμό των εξαρτημάτων σε σχέση με τον αντίστοιχο κωδικό αναφοράς. Το "AR" σημαίνει "As required" (Αναλόγως των απαιτήσεων): η ποσότητα ή ο αριθμός θα πρέπει να προσδιοριστούν.
Name - Ονομασία εξαρτήματος: Μεταφράσεις των ονομασιών από τα αγγλικά μπορείτε να βρείτε στο έγγραφο "Glossary of part names".
Validity - Καθορίζει το χρονικό πλαίσιο και τον τύπο/την έκδοση των μηχανημάτων στα οποία μπορεί να χρησιμοποιηθεί το εξάρτημα. Στο υπόμνημα, στο κάτω μέρος της σελίδας, μπορείτε να βρείτε μια αποσαφήνιση των κωδικών που χρησιμοποιούνται στο υπόδειγμα ισχύος παραγγελίας. Εάν αναφέρεται ένα υπόδειγμα ισχύος παραγγελίας στον τίτλο του κεφαλαίου, αυτό ισχύει για ολόκληρο το κεφάλαιο. Ένα σύμβολο "συν" στο υπόδειγμα θα πρέπει να ερμηνεύεται ως "και", ένα κόμμα ως "ή". Οι παρενθέσεις ομαδοποιούν τους κωδικούς ισχύος παραγγελίας, όπως οι παρενθέσεις στους μαθηματικούς τύπους. Δείτε το ακόλουθο παράδειγμα:
Το ‘PRESS:8BAR + (FREQ:50HZ+MOVOL:500V , FREQ:60HZ+MOVOL:575V)’ ισχύει για μηχανήματα με πίεση λειτουργίας 8 bar, συχνότητα 50 Hz και τάση τροφοδοσίας 500 V ή με πίεση λειτουργίας 8 bar, συχνότητα 60 Hz και τάση τροφοδοσίας 575 V.
EL – Κωδ. αναφοράς για το σχέδιο ή το εξάρτημα στο εσωτερικό του ηλεκτρικού πίνακα.
R. – Παρατηρήσεις: Πρόσθετες πληροφορίες σχετικά με το εξάρτημα. Επεξήγηση παρέχεται στο κάτω μέρος της σελίδας.

ES - Español

1 PEDIDO DE PIEZAS
Especifique siempre el número de referencia, el nombre y la cantidad de los elementos que necesita, además del tipo y número de serie de la máquina.

2 INFORMACIÓN DE LAS COLUMNAS
Ref - Número de referencia: enlaza una pieza concreta de la lista con el solo. Solo se muestran piezas con número de referencia en el plano. Las piezas del plano que no tienen números de referencia solo se muestran para ilustrar el conjunto.
Part number - Designación que se debe utilizar para pedir piezas de repuesto.
Si no se especifica una designación, esto quiere decir que el componente no está disponible como pieza de repuesto.
Las piezas que forman parte de un kit tendrán el número de kit en la línea inferior. Para consultar el contenido completo del kit, consulte el capítulo "1 – Service kits".
Una designación precedida por un punto negro forma parte del conjunto inmediatamente superior.
Remarks: información adicional de la designación inmediatamente superior.
Substituted by: la designación inmediatamente superior se ha sustituido por otra debido a una actualización o revisión.
Qty - Cantidad: indica el número de piezas en relación con el número de referencia correspondiente. "AR" significa "Según necesidad": cantidad o número a determinar.
Name - Nombre de la pieza: las traducciones de los nombres en inglés pueden encontrarse en el documento " Glossary of part names"
Validity - Define el periodo y tipo/versión de las máquinas en las que se puede utilizar la pieza. Puede encontrar una explicación de los códigos utilizados en el patrón de validez en la leyenda de la parte inferior de la página. Un patrón de validez mencionado en el título del capítulo es aplicable a todo el capítulo. Un signo '+' en el patrón debe interpretarse como una 'y' y una coma debe interpretarse como una 'o'. Los paréntesis agrupan los códigos de validez de manera similar a su uso en matemáticas; véase el siguiente ejemplo:
'PRESS:8BAR + (FREQ:50HZ+MOVOL:500V , FREQ:60HZ+MOVOL:575V)' es válido para máquinas con una presión de trabajo de 8 bar, una frecuencia de 50 Hz y un voltaje de alimentación de 500 V o de 8 bar, una frecuencia de 60 Hz y un voltaje de alimentación de 575 V.
EL – Referencia al plano o el componente del interior del armario eléctrico.
R. – Notas: información adicional sobre la pieza; se puede encontrar la explicación en la parte inferior de la página.

ET - Eesti

1 OSADE TELLIMINE
Täpsustage alati osa number, soovitud ühikute nimi ja kogus, aga ka masina tüüp ja seerianumber.

2 TEABE TULP
Ref - Viitenumber: seostab loendis nimetatud konkreetse osa joonisega. Joonisel on näidatud ainult viitenumbriga osad. Joonisel ilma viitenumbrita esitatud osadel on koostu kuvamisel illustreeriv tähendus.
Part number - Osa number, mida varuosade tellimisel kasutada.
Kui osa numbrit ei ole täpsustatud, ei ole vastav osa varuosana saadaval.
Komplekti kuuluvate osade puhul on alloleval real nimetatud komplekti number. Komplekti tervikliku kirjelduse leiate peatükist „1- Service kits".
Kui osa numbri ees on must punkt, sisaldub osa ülaltoodud koostus.
Remarks: osa numbri kohal kuvatav lisateave.
Substituted by: ülaltoodud osa number on uuenduse või kontrolli tulemusena asendatud teise osa numbriga.
Qty - Kogus: osutab asjaomase viitenumbriga seotud osade arvule. „AR" tähendab „vastavalt vajadusele": kogus või arv tuleb kindlaks määrata.
Name - Osa nimi: inglisekeelsete nimede tõlked leiate dokumendist „Glossary of part names".
Validity - Määratleb ajavahemiku ja masina tüübi/versiooni, mille puhul osa kasutatakse. Kasutusmustris kasutatud koodide selgituse leiate iga lehekülje allosas olevast legendist. Peatüki pealkirjas nimetatud kasutusmuster kohaldub tervele peatükile. Mustris kasutatud plussmärki tuleb tõlgendada sõnana „ja", komana või sõnana „või". Sarnaselt ümarsulgude matemaatikas kasutamisele rühmitavad ümarsulud kehtivuskoodide rühmad; vt järgmist näidet: 'PRESS:8BAR + (FREQ:50HZ+MOVOL:500V , FREQ:60HZ+MOVOL:575V)' kehtib masinate puhul, mille töörõhk on 8 bar ja sagedus 50 Hz ja toitepinge 500 V, või siis masinate puhul, mille töörõhk on 8 bar ja sagedus 60 Hz ja toitepinge 575V.
EL – Viide joonisele või elektrikapis olevale osale.
R. - Märkused: lisateave osa kohta. Selgituse leiate lehekülje allosast.

FI - Suomalainen

1 OSIEN TILAAMINEN
Määritä aina osanumero, haluttujen tuotteiden nimi ja määrä sekä koneen tyyppi ja sarjanumero.

2 SARAKETIEDOT
Ref - Viitenumero: Yhdistää jonkin tietyn luettelossa mainitun osan piirrokseen. Piirroksessa näkyvät vain ne osat, joilla on viitenumero. Ne osat, joilla ei ole viitenumeroa, ovat piirroksessa vain kokoonpanoa kuvaamassa.
Part number - Osanumero, jota on käytettävä varaosia tilattaessa.
Jos osanumeroa ei ole määritetty, komponentti ei ole saatavana varaosana.
Sarjan mukana tulevilla osilla on sarjanumero, joka on merkitty alla olevalle viivalle. Lue tiedot sarjan täydellisestä sisällöstä luvusta 1 – Service kits.
Osanumero, jota edeltää musta piste, sisältyy edellä olevaan kokoonpanoon.
Remarks: lisätietoja edellä olevaan osanumeroon.
Substituted by: edellä oleva osanumero on korvattu toisella osanumerolla päivityksen tai korjauksen takia.
Qty - Määrä: Osoittaa viitenumeroon liittyvien osien määrän. AR (As required) tarkoittaa määritettävää määrää.
Name - Osan nimi: englanninkielisten nimien käännökset on kerrottu asiakirjassa ”Glossary of part names”.
Validity - Määrittää sen ajanjakson ja koneiden tyypin tai version, joita osa koskee. Määrityskaavassa käytetyt koodit on selitetty sivun alalaidan kuvatekstissä. Luvun otsikossa mainittu määrityskaava koskee koko lukua. Kaavassa oleva plusmerkki tarkoittaa ja-sanaa ja pilkku tai-sanaa. Sulkeet ryhmittävät määrityskoodit matemaattisten sulkeiden tavalla, esimerkiksi näin:
PRESS:8BAR + (FREQ:50HZ+MOVOL:500V , FREQ:60HZ+MOVOL:575V) koskee koneita, joiden työskentelypaine on 8 baaria, taajuus 50 hertsiä ja verkkojännite 500 volttia tai joiden työskentelypaine on 8 baaria, taajuus 60 hertsiä ja verkkojännite 575 volttia.
EL – Viittaus piirrokseen tai sähkökotelon sisällä olevaan komponenttiin.
R. – Huomautukset: Lisätietoja osasta. Selitys on sivun alalaidassa.

FR - Français

1 COMMANDER DES PIÈCES
Toujours spécifier le numéro de pièce, la désignation et la quantité des articles souhaités ainsi que le type et le numéro de série de la machine.

2 COLONNE INFORMATIONS
Ref - Référence : associe une pièce donnée de la liste au schéma. Seules les pièces avec une référence sont illustrées sur le schéma. Les pièces représentées sur le schéma sans référence servent uniquement à illustrer l'ensemble.
Part number - Numéros de pièce à utiliser lors de la commande de pièces de rechange.
Si aucun numéro de pièce n'est indiqué, le composant n'est pas disponible en tant que pièce de rechange.
Pour les pièces contenues dans un kit, le numéro de kit est mentionné à la ligne ci-dessous. Pour voir le contenu du kit en détail, consulter le chapitre « 1 – Service Kits ».
Un numéro de pièce précédé d'un point noir est compris dans l'ensemble ci-dessus.
Remarks : informations supplémentaires sur le numéro de pièce ci-dessus.
Substituted by : le numéro de pièce ci-dessus a été remplacé par un autre numéro de pièce suite à une mise à jour ou une révision.
Qty - Quantité : indique le nombre de pièces en fonction du numéro de pièce correspondant. « AR » signifie « As required » (autant que nécessaire) : quantité ou nombre à définir.
Name - Désignation de la pièce : les traductions des désignations anglaises sont disponibles dans le document « Glossary of part names ».
Validity - Définit le délai et le type/version de machines pour lesquels les pièces sont valides. Pour plus de détails sur les codes utilisés dans le modèle de validité, voir la légende en bas de page. Un modèle de validité mentionné dans le titre du chapitre s'applique à l'ensemble du chapitre. Le signe plus utilisé dans le modèle se comprend comme un « et », une virgule comme un « ou». Les parenthèses regroupent les codes de validité, comme en mathématiques, voir l'exemple suivant :
« PRESS:8BAR + (FREQ:50HZ+MOVOL:500V , FREQ:60HZ+MOVOL:575V) » est valide pour des machines avec une pression de service de 8 bar et une fréquence de 50 Hz et une tension d'alimentation de 500 V ou une pression de service de 8 bar et une fréquence de 60 Hz et une tension d'alimentation de 575 V.
EL – Référence sur le schéma ou le composant à l'intérieur de l'armoire électrique.
R. – Remarque : informations supplémentaires sur la pièce. Pour plus de détails, voir le bas de page.

HU - Magyar

1 ALKATRÉSZRENDELÉS
Mindig adja meg a cikkszámot, a kért elemek nevét és mennyiségét, valamint a típust és a gyári számot.

2 A TÁBLÁZAT OSZLOPAI
Ref - Hivatkozási szám: a felsorolt alkatrészt a megfelelő ábrához társítja. A rajzon csak hivatkozási számmal ellátott alkatrészek láthatók. Az ábrán a hivatkozási számmal nem rendelkező alkatrészek csak az összeszerelés módját illusztrálják.
Part number - A pótalkatrészek rendelésénél használandó cikkszám.
Ha nincs megadva cikkszám, az adott alkatrész nem kapható pótalkatrészként.
Azokra az alkatrészekre, amelyek egy készlet részeként kaphatók, a készlet cikkszáma vonatkozik, amely az alsó sorban szerepel. A készlet teljes tartalmát lásd: „1 – Service Kits” című fejezet.
Ha egy cikkszámot pont előz meg, az illető alkatrész a közvetlenül felette lévő sorban szereplő egység részét képezi.
Remarks: További információk a közvetlenül felette lévő sorban szereplő cikkszámra vonatkozóan.
Substituted by: A közvetlenül felette lévő sorban szereplő cikkszámot frissítés vagy új változat következtében új cikkszám váltotta fel.
Qty - Mennyiség: az adott hivatkozási számhoz kapcsolódó alkatrészek számát jelöli. Az „AR” jelentése „As required” (igény szerint): itt megadhatja a mennyiséget vagy a számot.
Name - Az alkatrész neve: az angol nyelvű elnevezések fordítása az „Glossary of part names” c. dokumentumban található.
Validity - Azt az időkeretet, továbbá azokat a géptípusokat/-verziókat adja meg, amelyekhez az alkatrész használható. Az érvényességi formulában használt kódok magyarázata a lap alján olvasható. A fejezetcímben szereplő érvényességi formula az egész fejezetre érvényes. A formulában szereplő plusz (+) jel jelentése: „és”, a vessző (,) jelentése: „vagy”. A zárójelek a matematikában használt zárójelekhez hasonlóan csoportosítják az érvényességi kódokat; lásd a következő példát:
A „PRESS:8BAR + (FREQ:50HZ+MOVOL:500V , FREQ:60HZ+MOVOL:575V)” 8 bar üzemi nyomású, 50 Hz frekvenciájú és 500 V tápfeszültségű, vagy 8 bar üzemi nyomású, 60 Hz frekvenciájú és 575 V tápfeszültségű berendezéseket jelöl.
EL – Hivatkozás az elektromos szekrényen belüli ábrára vagy alkatrészre.
R. – Megjegyzések: Az alkatrésszel kapcsolatos további információk. A magyarázat a lap alján található.

IT - Italiano

1 ORDINE DEI RICAMBI
Specificare sempre il numero categorico, il nome e la quantità degli articoli richiesti, oltre al tipo e al numero di serie della macchina.

2 COLONNA DELLE INFORMAZIONI
Ref - Numero di riferimento: associa un ricambio specifico dalla lista all'illustrazione. Nell'illustrazione sono mostrati solo ricambi dotati di numero di riferimento. I ricambi presenti nell'illustrazione privi di numero di riferimento sono riportati semplicemente per illustrare il montaggio.
Part number - Numero categorico da utilizzare per l'ordine di parti di ricambio.
Quando non è specificato alcun numero categorico, il componente non è disponibile come parte di ricambio.
I ricambi contenuti in un kit avranno il numero di kit riportato nella riga sottostante. Per il contenuto completo del kit vedere il capitolo "1 – Service kits".
Un numero categorico preceduto da un punto nero fa parte del gruppo immediatamente precedente.
Remarks: le informazioni aggiuntive relative al numero categorico sono riportate in alto.
Substituted by: il numero categorico immediatamente precedente è stato sostituito da un altro numero categorico a causa di un aggiornamento o di una revisione.
Qty - Quantità: indica il numero di ricambi corrispondenti al numero di riferimento. "AR" significa "As required" (Secondo necessità): quantità o numero da definire.
Name - Nome parte: la traduzione dei termini dall'inglese è reperibile nel documento "Glossary of part names".
Validity - Definisce i tempi e il tipo/versione di macchine per le quali il ricambio è valido. La legenda in fondo alla pagina riporta una spiegazione dei codici utilizzati nello schema di validità. Uno schema di validità menzionato nel titolo del capitolo si applica all'intero capitolo. Un segno più nello schema deve essere interpretato come "e", una virgola come "o". Tra le parentesi sono raggruppati i codici di validità, al pari delle parentesi matematiche, vedere il seguente esempio:
"PRESS:8BAR + (FREQ:50HZ+MOVOL:500V , FREQ:60HZ+MOVOL:575V)" è valido per le macchine con pressione di esercizio di 8 bar e 50Hz di frequenza e una tensione di alimentazione di 500 V, o con pressione di esercizio di 8 bar, frequenza di 60Hz e tensione di alimentazione di 575 V.
EL – Riferimento all'illustrazione o al componente all'interno dell'armadio elettrico.
R. – Note: informazioni aggiuntive sulla spiegazione dei ricambi sono reperibili in fondo alla pagina.

JA - 日本の

1 部品の注文
部品番号、注文するアイテムの名称および数量、機器のタイプおよびシリアル番号を必ず指定してください。
サービスマーク" "のついたページにはサービスキットの部品が記載されています。 キットの内容物については、第1章「サービスキット」を参照してください。
2 各列の説明
Ref. - 参照番号：リストの部品が図のどこにあるかを示します。 参照番号がある部品のみが図に示されています。 参照番号がない部品はアセンブリを表現するため便宜上表記されています。
Part number - 部品番号：部品番号が示されていない部品は、スペア部品としては提供されていません。 太字の行はアセンブリを示します。 番号の後に黒い点が付いている部品は、すぐ上にある太字のアセンブリを構成しています。
"<<< >>>"は、"Name"と同じタイトルの別のリストを示します。
"**Ref**."または"Name"行の下に、特定の部品の部品番号が記載されている場合は、機器のタイプ/バージョンに応じて部品を選択してください。
Qty - 数量：参照番号に対応する部品の数量を示します。 „AR"は「必要に応じて」を意味し、必要に応じて数量または番号を指定します。
Name - 部品名：英語に対応する各言語の名称は「Glossary of part names」（部品名称対応表）に記載されています。
Remarks - 部品に関する追加情報です。
一連の文字列は特定の部品が指定認定団体によって承認されていることを示し、リストのコードまたは規定に準拠しています。
測定値はミリメートル単位で示されています。

LT - Lietuvos

1 DALIŲ UŽSAKYMAS
Visada nurodykite pageidaujamos prekės dalies numerį, pavadinimą ir kiekį. Taip pat nurodykite įrenginio tipą ir serijos numerį.

2 INFORMACIJA STULPELIUOSE
Ref - Nuorodos numeris: susieja konkrečią dalį iš sąrašo su brėžiniu. Brėžinyje rodomos tik nuorodos numerį turinčios dalys. Brėžinyje parodytos dalys be nuorodos numerio yra tiesiog įrenginio iliustracija.
Part number - Dalies numeris, naudojamas užsakant atsargines dalis.
Jei dalies numeris nenurodytas, komponentas negalimas kaip atsarginė dalis.
Rinkinyje esančios dalys turi rinkinio numerį, minimą apatinėje eilutė. Visą rinkinio turinį gali pamatyti skyriuje „1 – Service kits".
Jei prieš dalies numerį yra juodas taškas, jis yra viršuje pateiktame įrenginyje.
Remarks: papildoma dalies numerio informacija pateikta dešinėje pusėje viršuje.
Substituted by: dešinėje viršuje nurodytas dalies numeris buvo pakeistas kitu dalies numerio, nes vyko atnaujinimas arba revizija.
Qty - Kiekis: pateikiamas dalių, kurioms priskiriamas atitinkamas nuorodos numeris, skaičius. „AR" reiškia „Priklausomai nuo poreikio": kiekis arba skaičius bus nustatytas to prireikus.
Name - Dalies pavadinimas: anglų kalba pateiktų pavadinimų vertimus rasite dokumente „Glossary of part names".
Validity - Apibūdinamas laikotarpis ir įrenginio tipas / versija, kurioms dalis tinka. Tinkamumo šablone naudojami kodai paaiškinti puslapio apačioje esančioje legendoje. Tinkamumo šablonas skyriaus pavadinimas taikomas visam skyriui. Pliuso ženklas šablone reiškia „ir", o kablelis – „arba". Skliaustais grupuojami tinkamumo kodai (kaip ir matematiniai veiksmai), žr. pavyzdį:
„PRESS:8BAR + (FREQ:50HZ+MOVOL:500V , FREQ:60HZ+MOVOL:575V)" tinka įrenginiams, kurių darbinis slėgis yra 8 barai, dažnis yra 50 Hz, o maitinimo įtampa yra 500 V, arba darbinis slėgis yra 8 barai, dažnis yra 60 Hz, o maitinimo įtampa yra 575 V.
EL – Nuoroda į brėžinį arba komponentą elektros modulio viduje.
R. – Pastabos: papildoma informacija apie dalį. Paaiškinimus galite rasti puslapio apačioje.

LV - Latvijas

1. DETAĻU PASŪTĪŠANA
Vienmēr norādiet detaļas numuru, nosaukumu un vajadzīgo daudzumu, kā arī iekārtas tipu un sērijas numuru.

2. KOLONNAS INFORMĀCIJA
Ref – Atsauces numurs: saista konkrētu sarakstā esošo detaļu ar rasējumu. Rasējumā tiek parādītas tikai detaļas ar atsauces numuru. Detaļas rasējumā bez atsauces numura paredzētas vienīgi tam, lai attēlotu attiecīgo mezglu.
Part number – Detaļas numurs, kas jāizmanto, pasūtot rezerves daļas.
Ja detaļas numurs nav norādīts, attiecīgais komponents nav pieejams kā rezerves daļa.
Komplektā iekļautām detaļām nākamajā rindā būs norādīts komplekta numurs. Komplekta pilnīgs saturs aprakstīts nodaļā "1 – Service kits".
Ja pirms detaļas numura ir melns punkts, tā ir iekļauta iepriekš attēlotajā mezglā.
Remarks: papildinformācija par iepriekšējo detaļas numuru.
Substituted by: iepriekšējais detaļas numurs ir aizstāts ar citu detaļas numuru atjaunināšanas vai pārskatīšanas dēļ.
Qty – Daudzums: apzīmē detaļu skaitu attiecīgajam atsauces numuram. "AR" nozīmē "pēc nepieciešamības": jānosaka daudzums vai numurs.
Name – Detaļas nosaukums: angļu valodas nosaukumu tulkojumi ir atrodami dokumentā "Glossary of part names".
Validity – Nosaka iekārtu derīguma periodu un tipu/versiju. Derīguma norādē iekļauto kodu skaidrojums ir norādīts eksplikācijā lappuses apakšdaļā. Nodaļas virsrakstā minētā derīguma norāde attiecas uz visu nodaļu. Pluszīme norādē jāinterpretē kā "un", bet komats kā "vai". Iekavas grupē derīguma kodus līdzīgi kā iekavas matemātikā, piemēram: "PRESS:8BAR + (FREQ:50HZ+MOVOL:500V , FREQ:60HZ+MOVOL:575V)" ir derīgs iekārtām ar 8 bāru darba spiedienu, 50 Hz frekvenci un 500 V barošanas spriegumu vai iekārtām ar 8 bāru darba spiedienu, 60 Hz frekvenci un 575 V barošanas spriegumu.
EL – Atsauce uz rasējumu vai elektrosadales skapja komponentu.
R. – Piezīmes: papildinformācija par detaļu. Skaidrojums atrodams lappuses apakšdaļā.

NL - Nederlands

1 BESTELLEN VAN ONDERDELEN
Vermeld altijd het onderdeelnummer, de benaming en de hoeveelheid van de gewenste onderdelen, alsmede het type en het serienummer van de machine.

2 KOLOMINFORMATIE
Ref. - Referentienummer: koppelt een specifiek onderdeel in de lijst aan de desbetreffende tekening. Alleen onderdelen met een referentienummer zijn in de tekening afgebeeld. Onderdelen zonder referentienummer die op de tekening voorkomen, worden slechts getoond om het geheel te illustreren.
Part number - Onderdeelnummer dat wordt gebruikt voor het bestellen van reserveonderdelen.
Indien geen onderdeelnummer is aangegeven, is de betreffende component niet als reserveonderdeel verkrijgbaar.
Van onderdelen uit een kit wordt het kitnummer op de regel eronder vermeld. Voor de volledige inhoud van de kit, zie paragraaf "1 - Service kits".
Een onderdeel waarvan het nummer gevolgd wordt door een zwart rondje, maakt deel uit van het vet afgedrukte samenstel direct erboven.
Remarks: aanvullende informatie voor het onderdeelnummer direct erboven.
Substituted by: het nummer direct erboven is vervangen door een ander onderdeelnummer als gevolg van een update of herziening.
Qty - Hoeveelheid: geeft het aantal onderdelen aan met betrekking tot met het overeenkomstige referentienummer. "AR" betekent "As required": de hoeveelheid of het aantal moet nader worden bepaald.
Name - Naam van het onderdeel: vertalingen van de Engelse benamingen zijn te vinden in het document "Glossary of part names".
Validity - Bepaalt het tijdsframe en type/versie van de machines waarvoor het onderdeel geldig is. Verklaring van de codes die in het geldigheidspatroon zijn gebruikt, vindt u in de legenda onder aan de pagina. Een geldigheidspatroon vermeld in de titel van het hoofdstuk is van toepassing op het hele hoofdstuk. Een plusteken in het patroon staat voor 'en' en een komma voor 'of'. Haakjes groeperen de geldigheidscodes, vergelijkbaar met die in de wiskunde, zie het volgende voorbeeld:
"PRESS:8 BAR + (FREQ:50HZ+MOVOL:500V, FREQ:60HZ+MOVOL:575V)" is geldig voor machines met een werkdruk van 8 bar, 50Hz-frequentie en 500V-voedingsspanning of een werkdruk van 8 bar, 60Hz-frequentie en 575V-voedingsspanning.
EL – Referentie van de tekening of het onderdeel in de elektrische aansluitkast.
R. - Opmerkingen: extra informatie over het onderdeel. Uitleg vindt u onder aan de pagina.

NO - Norsk

1 BESTILLE DELER
Spesifiser alltid delenummeret, navnet og antallet til den nødvendige artikkelen, samt typen og serienummeret til maskinen.

2 KOLONNEINFORMASJON
Ref – Referansenummer: knytter en spesifikk del fra listen til tegningen. Kun delene med et referansenummer vises i tegningen. Delene i tegningen som vises uten et referansenummer, er kun tatt med for å illustrere monteringen.
Part number – Delenummer skal brukes ved bestilling av reservedeler.
Når det er ikke er spesifisert et delenummer, er ikke komponenten tilgjengelig som en reservedel.
Deler som inngår i et sett, har settnummeret nevnt på linjen nedenfor. Du finner fullstendig oversikt over innholdet i settet i kapittel 1 – Service kits.
Et delenummer med en svart prikk foran er en del av settet rett ovenfor.
Remarks: ytterligere informasjon om delenummeret rett ovenfor.
Substituted by: Delenummeret rett ovenfor har blitt erstattet av et annet delenummeret på grunn av en oppdatering eller revisjon.
Qty – Antall: angir antall deler av det tilhørende referansenummeret. AR betyr Etter behov: Antallet er ikke bestemt.
Name – Delenavn: Du finner oversettelser av de engelske navnene i dokumentet «Glossary of part names».
Validity – Definerer tidsrommet og maskintypen/-versjonen som delen er gyldig for. Du finner en oversikt over kodene som brukes i gyldighetsmønsteret, i forklaringen nederst på siden. Et gyldighetsmønster som nevnes i kapitteltittelen, gjelder for hele kapittelet. Et pluss-tegn i mønsteret skal tolkes som "og", mens et komma skal tolkes som "eller". Parenteser deler inn gyldighetskodene, omtrent på samme måte som matematiske parenteser. Se følgende eksempel:
"PRESS:8BAR + (FREQ:50HZ+MOVOL:500V , FREQ:60HZ+MOVOL:575V)" er gyldig for maskiner med arbeidstrykk på 8 bar, frekvens på 50 Hz og forsyningsspenning på 500 V; eller arbeidstrykk på 8 bar, frekvens på 60 Hz og forsyningsspenning på 575V.
EL – Referanse til tegningen eller komponentene inne i koplingsskapet.
R. – Kommentarer: Ekstra informasjon om delen. Du finner en forklaring nederst på siden.

PL - Polski

1 ZAMAWIANIE CZĘŚCI
Podczas zamawiania produktów należy zawsze podawać następujące informacje: numer części, nazwę i liczbę produktów, a także typ i numer seryjny urządzenia.

2 OBJAŚNIENIE NAZW KOLUMN
Ref. — numer referencyjny: informuje, na którym rysunku można znaleźć konkretną część z listy. Na rysunku zamieszczone są wyłącznie części opatrzone numerem referencyjnym. Części bez przypisanego numeru referencyjnego zostały zamieszczone na rysunku wyłącznie w celu prawidłowego zilustrowania montażu.
Part number — numer części stosowany podczas zamawiania części zamiennych.
W przypadku braku numeru części danej pozycji nie można zamówić jako części zamiennej.
Jeśli dana część jest elementem zestawu, w kolejnym wierszu znajduje się numer zestawu. Informacje na temat pełnej zawartości zestawu można znaleźć w rozdziale „1 – Service kits”.
Jeśli numer części poprzedza czarna kropka, dana część jest elementem zestawu opisanego powyżej.
Remarks: dodatkowe informacje na temat numeru części zamieszczonego powyżej.
Substituted by: numer części zamieszczony powyżej został zastąpiony innym numerem części na skutek modernizacji lub aktualizacji.
Qty — ilość: oznacza liczbę części w odniesieniu do danego numeru referencyjnego. Symbol „AR” oznacza „zależnie od wymagań”: liczba lub numer do ustalenia.
Name — nazwa części: tłumaczenia nazw angielskich znajdują się w dokumencie „Glossary of part names”.
Validity — wskazuje ramy czasowe oraz typ/wersję urządzenia, do którego przeznaczona jest część. Kody wykorzystywane we wzorze przydatności zostały objaśnione w legendzie u dołu strony. Wzór przydatności wspomniany w tytule rozdziału dotyczy całego rozdziału. Znak dodawania we wzorze należy interpretować jako słowo „i”, natomiast przecinek — jako słowo „lub”. Nawiasy pełnią tu funkcję podobną do nawiasów w matematyce — grupują kody przydatności — jak w poniższym przykładzie:
kod „PRESS:8BAR + (FREQ:50HZ+MOVOL:500V , FREQ:60HZ+MOVOL:575V)” dotyczy maszyn o ciśnieniu roboczym 8 bar, częstotliwości 50 Hz i napięciu zasilania 500 V lub o ciśnieniu roboczym 8 bar, częstotliwości 60 HZ i napięciu zasilania 575 V.
EL — odnośnik do rysunku lub podzespołu wewnątrz szafki rozdzielczej.
R. — uwagi: dodatkowe informacje na temat części. Wyjaśnienie znajduje się u dołu strony.

PT - Português

1 ENCOMENDA DE PEÇAS
Especifique sempre a referência da peça, o nome e a quantidade de itens pretendidos, bem como o tipo e o número de série da máquina.

2 INFORMAÇÕES DAS COLUNAS
Ref - Número de referência: associa uma peça específica da lista ao desenho. Neste último, são apresentadas apenas as peças com um número de referência. As peças apresentadas no desenho sem um número de referência destinam-se simplesmente a ilustrar o processo de montagem.
Part number - Referência da peça a utilizar no caso de encomenda de peças sobresselentes.
Se não for especificada uma referência da peça, significa que o componente não se encontra disponível como uma peça sobresselente.
As peças incluídas num kit terão o número do kit mencionado na linha abaixo. Para obter informações sobre o conteúdo completo do kit, consulte o capítulo "1 – Service kits".
Uma referência da peça precedida de um ponto preto está incluída no processo de montagem imediatamente acima mencionado.
Remarks: encontra informações adicionais sobre a referência da peça imediatamente acima.
Substituted by: a referência da peça imediatamente acima foi substituída por outra referência devido a uma actualização ou revisão.
Qty - Quantidade: indica o número de peças em relação ao número de referência correspondente. "AR" (As required) significa "Como exigido": quantidade ou número a determinar.
Name - Nome da peça: encontra as traduções dos nomes em inglês no documento "Glossary of part names".
Validity - Define o período de tempo e o tipo/versão de máquinas para que a peça é válida. Encontra a explicação sobre os códigos utilizados no padrão de validade na legenda situada no final da página. Um padrão de validade mencionado no título do capítulo aplica-se a todo o capítulo. Um sinal de adição no padrão deve ser interpretado como "e", ao passo que uma vírgula deve ser interpretada como "ou". Os parênteses agrupam os códigos de validade, da mesma forma que os parênteses utilizados em operações matemáticas; veja o seguinte exemplo:
"PRESS:8BAR + (FREQ:50HZ+MOVOL:500V , FREQ:60HZ+MOVOL:575V)" é válido para máquinas com uma pressão de trabalho de 8 bar, uma frequência de 50 Hz e uma tensão de alimentação de 500 V ou uma pressão de trabalho de 8 bar, uma frequência de 60 Hz e uma tensão de alimentação de 575 V.
EL – Referência ao desenho ou ao componente dentro do compartimento eléctrico.
R. – Observações: informações adicionais sobre a peça. Encontra a explicação no final da página.

RO - român

1 COMANDAREA PIESELOR
Indicaţi întotdeauna numărul de catalog, numele şi cantitatea articolelor solicitate, precum şi tipul şi numărul de serie al maşinii.

2 INFORMAŢIILE DIN COLOANE
Ref. - Numărul de referinţă: face legătura între o piesă din listă şi una din schemă. Numai piesele care au un număr de referinţă apar în schemă. Piesele din schemă care nu au un număr de referinţă sunt incluse doar pentru a clarifica modul de asamblare.
Part number - Numărul de catalog este utilizat pentru comandarea pieselor de schimb.
Atunci când nu este specificat un număr de catalog, componenta nu este disponibilă ca piesă de schimb.
Pentru piesele incluse în kituri, numărul kitului este menţionat pe rândul următor. Pentru conţinutul complet al kitului, consultaţi capitolul „1 – Service kits”.
Un număr de catalog precedat de un punct negru este inclus în ansamblul aflat chiar deasupra acestuia.
Remarks: Informaţii suplimentare privind numărul de catalog de mai sus.
Substituted by: Numărul de catalog de mai sus a fost înlocuit de un alt număr de catalog din cauza unei actualizări sau a unei revizuiri.
Qty - Cantitate: indică numărul de piese care au numărul de referinţă corespunzător. „AR” este abrevierea pentru „As required”: cantitatea şi numărul vor fi determinate conform necesităţilor.
Name - Numele piesei: traducerile numelor din engleză se află în documentul „Glossary of part names”.
Validity - Defineşte perioada de valabilitate şi tipul/versiunea utilajelor cu care piesa este compatibilă. Clarificarea codurilor utilizate în modelul de valabilitate poate fi găsită în legenda din partea de jos a paginii. Un model de valabilitate menţionat în titlul unui capitol se aplică întregului capitol. Un semn plus care apare într-un model va fi interpretat drept „şi”, virgulă ori „sau”. Codurile de valabilitate sunt grupate cu ajutorul unor paranteze având o funcţie similară parantezelor matematice, a se vedea exemplul de mai jos:
„PRESS:8BAR + (FREQ:50HZ+MOVOL:500V , FREQ:60HZ+MOVOL:575V)” indică valabilitatea pentru utilajele cu presiune de lucru de 8 bari, frecvenţă de 50 Hz şi tensiune de alimentare de 500 V sau presiune de lucru de 8 bari, frecvenţă de 60 Hz şi tensiune de alimentare de 575 V.
EL – Referire la schemă sau la componenta din cofretul electric.
R. – Observaţii: informaţii suplimentare privind piesa. Explicaţiile pot fi găsite în partea de jos a paginii.

RU - русский

1 ЗАКАЗ ДЕТАЛЕЙ
Всегда указывайте номер по каталогу, наименование и количество требуемых позиций, а также тип и серийный номер машины.

2 ИНФОРМАЦИЯ
Ref - Ссылочный номер: соотносит деталь из списка со схемой. На схеме показаны только детали со ссылочным номером. Детали без ссылочного номера приведены на схемах только для демонстрации всего узла в сборе.
Part number - Номер детали, указываемый при заказе запасных частей.
Если номер детали не указан, то компонент недоступен в качестве отдельной запасной части.
Для деталей, входящих в состав комплекта, будут приведены номера этих комплектов, упомянутых строчкой ниже. Чтобы узнать полный состав комплекта см. раздел “1 – Service kits”.
Деталь, перед номером которой стоит черная точка, входит в состав изображенного выше узла.
Remarks: дополнительная информация о номере приведенной выше детали.
Substituted by: номер изображенной выше детали был заменен другим номером по причине обновления или переработки.
Qty - Количество: указывает количество деталей относительно соответствующего ссылочного номера. „AR“ значит „As required“: количество или номер будут определены.
Name - Наименование детали: перевод англоязычных наименований можно найти в документе “Glossary of part names”(Словарь наименований деталей).
Validity - Определяет временные рамки и тип/версию машины, в которой используется деталь. Пояснение кодов, используемых в данной графе, можно найти в списке обозначений внизу страницы. Информация о совместимости, упомянутая в данной главе, актуальна для всей главы. Знак плюса в примечании о совместимости следует принимать за ‘и’, запятые — за ‘или’. Скобки группируют коды совместимости по принципу, схожему с математическим. См. пример:
‘PRESS:8BAR + (FREQ:50HZ+MOVOL:500V , FREQ:60HZ+MOVOL:575V)’ применима в машинах с рабочим давлением 8 бар, частотой 50 Гц и напряжением источника питания 500 В или рабочим давлением 8 бар, частотой 60 Гц и напряжением источника питания 575 В.
EL – Ссылка на схему или компонент электрического шкафа.
R. – Примечания: дополнительная информация о детали. Пояснения приведены внизу страницы.

SK - slovenský

1 OBJEDNÁVANIE DIELOV
Vždy uveďte číslo dielu, názov a množstvo požadovaných položiek, ako aj typ a výrobné číslo zariadenia.

2 INFORMÁCIE V STĹPCOCH
Ref – Referenčné číslo: spája konkrétny diel v zozname s nákresom. Na nákrese sú zobrazené len diely s referenčným číslom. Diely v nákrese bez referenčného čísla slúžia len na znázornenie zostavy.
Part number – Číslo dielu, ktoré treba použiť pri objednávaní náhradných dielov.
Ak nie je uvedené žiadne číslo dielu, daný komponent nie je k dispozícii ako náhradný diel.
Diely, ktoré sú súčasťou súpravy, majú v riadku nižšie uvedené číslo súpravy. Zoznam všetkých dielov v súprave nájdete v kapitole „1 – Service kits“.
Číslo dielu, pred ktorým sa nachádza čierna bodka, je súčasťou zostavy uvedenej nad ním.
Remarks: Ďalšie informácie o čísle dielu vyššie.
Substituded by: Číslo dielu uvedené vyššie bolo nahradené iným dielom kvôli inovácii alebo revízii.
Qty – Množstvo: Indikuje počet dielov v súvislosti s príslušným referenčným číslom. „AR“ znamená „As required“: množstvo alebo počet sa musí určiť.
Name – Názov dielu: Preklady anglických názvov nájdete v dokumente „Glossary of part names“(Slovník názvov dielov).
Validity – Definuje časový rámec a typ/verziu zariadení, pre ktoré možno daný diel použiť. Informácie o význame kódov použitých v reťazci označujúcom platnosť nájdete v legende v spodnej časti strany. Reťazec označujúci platnosť uvedený v názve kapitoly sa vzťahuje na celú kapitolu. Znamienko plus v tomto reťazci znamená „a“ a čiarka znamená „alebo“. Zátvorky slúžia na zoskupenie kódov označujúcich platnosť podobne ako v matematických vzorcoch. Pozrite si nasledujúci príklad:
„PRESS:8BAR + (FREQ:50HZ+MOVOL:500V , FREQ:60HZ+MOVOL:575V)“ – platí pre zariadenia s pracovným tlakom 8 barov, frekvenciou 50 Hz a napájacím napätím 500 V alebo pracovným tlakom 8 barov, frekvenciou 60 Hz a napájacím napätím 575 V.
EL – Odkaz na nákres komponentu v elektrickej skrini.
R. – Poznámky: Ďalšie informácie o danom diele. Vysvetlenie nájdete v spodnej časti stránky.

SL - slovenščina

1 NAROČANJE DELOV
Vedno navedite številko dela, ime in količino zahtevanih predmetov ter tip in serijsko številko stroja.

2 INFORMACIJE O STOLPCU
Ref - Referenčna številka: povezuje določen navedeni del z risbo. Na risbi so prikazani samo deli z referenčno številko. Deli na risbi, ki nimajo referenčne številke, so namenjeni samo prikazu sklopa.
Part number - Številko dela uporabite pri naročanju nadomestnih delov.
- Če številka dela ni navedena, komponenta ni na voljo kot nadomestni del.
Za dele, ki so del kompleta, bo v spodnji vrstici navedena tudi številka kompleta. Celotno vsebino kompleta si oglejte v poglavju "1 – Service kits".
Številka dela, pred katero je črna pika, spada v sklop tik zgoraj.
Remarks: dodatne informacije o številki dela tik zgoraj.
Substituted by: številka dela tik zgoraj je zamenjana z drugo številko dela, zaradi posodobitve ali revizije.
Qty Količina: določa število delov v povezavi z ustrezno referenčno številko. Kratica "AR" pomeni "As required" (kot je zahtevano): količina ali število za določitev.
Name - Ime dela: prevodi angleških imen se nahajajo v dokumentu "Glossary of part names".
Validity - Določa časovni razpon in tip/različico stroja, ki veljata za del. Razlago kod, ki se uporabljajo v vzorcu veljavnosti, najdete v legendi na dnu strani. Vzorec veljavnosti, ki je naveden v naslovu poglavja, velja za celotno poglavje. Znak plus v vzorcu lahko pomeni besedo "in", vejico ali besedo "ali". Oklepaji združujejo kode veljavnosti, podobno kot oklepaji pri matematiki; glejte spodnji primer:
"PRESS:8BAR + (FREQ:50HZ+MOVOL:500V , FREQ:60HZ+MOVOL:575V)" velja za stroje z delovnim tlakom 8 barov in frekvenco 50 Hz ter napajalno napetostjo 500 V, ali z delovnim tlakom 8 barov, frekvenco 60 Hz in napajalno napetostjo 575 V.
EL – Referenca za risbo ali komponenta znotraj električne omarice.
R. – Opombe: dodatne informacije o delu. Razlago lahko najdete na dnu strani.

SV - Svenska

1 BESTÄLLA DELAR
Ange alltid reservdelsnummer, namn och antal delar som önskas, samt typbeteckning och tillverkningsnummer på maskinen.

2 SPALTINFORMATION
Ref. – Referensnummer: kopplar ihop en viss reservdel i förteckningen med ritningen. Endast reservdelar med referensnummer visas i ritningen. Reservdelar som saknar referensnummer i ritningen finns med för att illustrera själva monteringen.
Part number – Reservdelsnummer som används vid beställning av reservdelar.
Om reservdelsnummer saknas finns komponenten inte som reservdel.
Delar som tillhör en sats har satsnumret angivet på raden nedanför. Se kapitel ”1 – Service kits” för satsens kompletta innehåll.
Ett reservdelsnummer som föregås av en svart punkt finns med i enheten direkt ovanför.
Remarks: Ytterligare information om reservdelsnumret direkt ovanför.
Substituted by: Reservdelsnumret direkt ovanför har ersatts med ett annat reservdelsnummer på grund av en uppdatering eller revision.
Qty – Antal: Anger hur många delar som är kopplade till motsvarande referensnummer. "AR" betyder "As required" (som erfordras): Antal eller nummer bestäms senare.
Name - Reservdelsbeteckningar: Översättningar av de engelska beteckningarna återfinns i dokumentet "Glossary of part names" (Ordlista med reservdelsbeteckningar).
Validity – Definierar tidsramen och typ/version av maskin som reservdelen passar för. En förklaring av koderna som används i giltighetsmönstret finns i symbolförklaringen längst ner på sidan. Ett giltighetsmönster som nämns i ett kapitel gäller för hela kapitlet. Ett plustecken i mönstret ska tolkas som "och" och ett komma som "eller". Parenteser grupperar giltighetskoderna i likhet med parenteser inom matematiken. Se följande exempel:
"PRESS:8BAR + (FREQ:50HZ+MOVOL:500V , FREQ:60HZ+MOVOL:575V)" gäller maskiner med 8 bar arbetstryck, 50 Hz frekvens och 500 V matningsspänning, eller 8 bar arbetstryck, 60 Hz frekvens och 575 V matningsspänning.
EL – Referens till ritningen eller komponenten inuti elskåpet.
R. – Anmärkningar: Extra information om reservdelen. En förklaring finns längst ner på sidan.

TR - Türk

1 PARÇA SİPARİŞİ
Her zaman gereken parçaların parça numarası, adı ve miktarının yanı sıra makinenin tipini ve seri numarasını da belirtin.

2 SÜTUN BİLGİLERİ
Ref - Referans numarası: Listenin belirli bir bölümünü çizime bağlar. Yalnızca referans numarası olan parçalar çizimde gösterilir. Çizimde referans numarası olmayan parçalar yalnızca mekanizmanın tamamını göstermek için konulmuştur.
Part number - Yedek parça siparişi verirken kullanılacak parça numarası.
Parça numarası belirtilmediğinde, bu bileşen bir yedek parça olarak bulunmaz.
Bir kite dahil olan parçalar, alttaki satırda bulunan kit numarasına sahiptir. Kitin tüm içeriğini görmek için bkz. bölüm "1 – Service kits".
Önünde siyah nokta olan parça numaraları, hemen yukarıdaki mekanizmada bulunur.
Remarks: Hemen yukarıdaki parça numarası ile ilgili ek bilgiler.
Substituted by: Bir güncelleme veya revizyon nedeniyle hemen yukarıdaki parça numarası yerine başka bir parça numarası gelmiştir.
Qty - Miktar: İlgili referans numarasıyla ilgili parça sayısını gösterir. "AR" kısaltması "As required" (miktarı veya sayısı belirlenecek) anlamına gelir.
Name - Parça adı: İngilizce adların tercümeleri "Glossary of part names"(Parça adları sözlüğü) adlı belgede bulunabilir.
Validity - Parçanın geçerli olduğu zaman aralığını ve makine tiplerini/modellerini belirler. Geçerlilik düzeninde kullanılan kodların açıklamaları sayfanın alt kısmında bulunabilir. Bölüm başlığında bahsedilen bir geçerlilik düzeni, tüm bölüm için geçerlidir. Düzende bir artı işareti olması "ve", virgül işareti olması "veya" olarak anlaşılabilir. Geçerlilik kodları, matematikte kullanılan parantezlere benzer şekilde, parantezler ile gruplara ayrılır. Aşağıdaki örneğe bakabilirsiniz:
"PRESS:8BAR + (FREQ:50HZ+MOVOL:500V , FREQ:60HZ+MOVOL:575V)" düzeni 8 bar çalışma basıncı olan, 50 Hz frekanslı, 500 V besleme gerilimli makineler veya 8 bar çalışma basıncı, 60 Hz frekanslı ve 575 V besleme gerilimli makineler için geçerlidir.
EL – Elektrik panosu içindeki çizim veya parçaya referans anlamına gelir.
R. – Notlar: Parça hakkında ek bilgiler. Açıklamalar sayfanın alt kısmında bulunabilir.

ZH - 中国的

1 ##零件
#必###明所需物件的零件号、名称和数量，以及机器的#型和 序列号。

2 #信息
Ref - 参考#号：将列表中的具体零件与##相##。##中##示具有参考#号的零件。##中不#参考#号的零件只用于#明#成##。
Part number - ###件#需要使用零件号。
如果不###明零件号#，将无法以#件形式提供部件。
套件中包含的零件将具有下行所提的套件#号。有#套件的完整信息，#参#第 1 章 – Service kits 保#套件。
上方的#成中包含了零件号，零件号前加有#点符号。
Remarks (#注)：上方零件号的##信息。
Substituted by (取代)：上方的零件号因更新或版本原因更##其他零件号。
Qty - 数量：表示与##参考#号相#的零件数量。"AR" 表示"根据需要"：数量或数目待#定。
Name - 零件名称："Glossary of names"(零件名称##)文#中提供了英文名称的##翻#。
Validity - 定##零件#用的##期限以及机器的#型/版本。本#底部的#例#有#性表#式中使用的代##行了#明。章###中提及的有#性表#式#用于全部章#。表#式中的加号表示"和"，逗号表示"或"。#括号用于#合有#代#，#似于数学括号，参#以下示例：'PRESS:8BAR + (FREQ:50HZ+MOVOL:500V , FREQ:60HZ+MOVOL:575V)' #用于以下机器：工作#力 8 bar，#率 50 Hz，#源## 500 V；或工作#力 8 bar，#率 60 Hz，#源## 575 V。
EL –参考##或##内部#件。
R.– #注：有#零件的#充信息。本#底部提供相##明。

2200 9035 00 - KIT 2000H - WITHOUT DRYER
IDRY:N

	Qty	Name
•	1	AIR FILTER ELEM.
•	1	OIL FILTER

2200 9035 01 - KIT 2000H - WITH DRYER
IDRY:Y

	Qty	Name
•	1	AIR FILTER ELEM.
•	1	OIL FILTER
•	1	FILTER MESH LD20X - ED12

2200 9035 02 - KIT 4000H - 20-25HP - GEAR DRIVEN - WITHOUT DRYER
(MODEL:CPBG20_18J , MODEL:CPBG25_18J) + DRIVETYPE:GEAR + IDRY:N

	Qty	Name
•	1	AIR FILTER ELEM.
•	1	OIL FILTER
•	1	SEPARATOR OIL
•	1	PREFILTER 15-26/C67

2200 9035 06 - KIT 4000H - 20-25HP - DIRECT DRIVEN - WITHOUT DRYER
(MODEL:CPVD21_18J , MODEL:CPVD25_18J) + DRIVETYPE:DIRECT + IDRY:N

	Qty	Name
•	1	AIR FILTER ELEM.
•	1	OIL FILTER
•	1	SEPARATOR OIL
•	1	PREFILTER 15-26/C67
•	2	FILTER AIR 221 X 221 X 18
•	4	GREASE SCREWG. SLIDE AMBER

2200 9035 03 - KIT 4000H - 20-25HP - GEAR DRIVEN - WITH DRYER
(MODEL:CPBG20_18J , MODEL:CPBG25_18J) + DRIVETYPE:GEAR + IDRY:Y

	Qty	Name
•	1	AIR FILTER ELEM.
•	1	OIL FILTER
•	1	SEPARATOR OIL
•	1	PREFILTER 15-26/C67
•	1	KIT WEAR DRAIN

2200 9035 07 - KIT 4000H - 20-25HP - DIRECT DRIVEN - WITH DRYER
(MODEL:CPVD21_18J , MODEL:CPVD25_18J) + DRIVETYPE:DIRECT + IDRY:Y

	Qty	Name
•	1	AIR FILTER ELEM.
•	1	OIL FILTER
•	1	SEPARATOR OIL
•	1	PREFILTER 15-26/C67
•	1	KIT WEAR DRAIN
•	2	FILTER AIR 221 X 221 X 18
•	4	GREASE SCREWG. SLIDE AMBER

2200 9035 04 - KIT 4000H - 30-35HP - GEAR DRIVEN - WITHOUT DRYER
(MODEL:CPBG29_18J , MODEL:CPBG34_18J) + DRIVETYPE:GEAR + IDRY:N

	Qty	Name
•	1	AIR FILTER ELEM.
•	1	OIL FILTER

continues on next page ...

... continued from previous page

2200 9035 04 - KIT 4000H - 30-35HP - GEAR DRIVEN - WITHOUT DRYER

(MODEL:CPBG29_18J , MODEL:CPBG34_18J) + DRIVETYPE:GEAR + IDRY:N

	Qty	Name
•	1	SEPARATOR OIL
•	1	PREFILTER 15-26/C67

2200 9035 08 - KIT 4000H - 30-35HP - DIRECT DRIVEN - WITHOUT DRYER

(MODEL:CPVD29_18J , MODEL:CPVD34_18J) + DRIVETYPE:DIRECT + IDRY:N

	Qty	Name
•	1	AIR FILTER ELEM.
•	1	OIL FILTER
•	1	SEPARATOR OIL
•	1	PREFILTER 15-26/C67
•	2	FILTER AIR 221 X 221 X 18
•	4	GREASE SCREWG. SLIDE AMBER

2200 9035 05 - KIT 4000H - 30-35HP - GEAR DRIVEN - WITH DRYER

(MODEL:CPBG29_18J , MODEL:CPBG34_18J) + DRIVETYPE:GEAR + IDRY:Y

	Qty	Name
•	1	AIR FILTER ELEM.
•	1	OIL FILTER
•	1	SEPARATOR OIL
•	1	PREFILTER 15-26/C67
•	1	KIT WEAR DRAIN

2200 9035 09 - KIT 4000H - 30-35HP - DIRECT DRIVEN - WITH DRYER

(MODEL:CPVD29_18J , MODEL:CPVD34_18J) + DRIVETYPE:DIRECT + IDRY:Y

	Qty	Name
•	1	AIR FILTER ELEM.
•	1	OIL FILTER
•	1	SEPARATOR OIL
•	1	PREFILTER 15-26/C67
•	1	KIT WEAR DRAIN
•	2	FILTER AIR 221 X 221 X 18
•	4	GREASE SCREWG. SLIDE AMBER

2200 9035 39 - KIT 8000H - 20-25HP - GEAR DRIVEN - WITHOUT DRYER

(MODEL:CPBG20_18J , MODEL:CPBG25_18J) + DRIVETYPE:GEAR + IDRY:N

	Qty	Name
•	1	AIR FILTER ELEM.
•	1	OIL FILTER
•	1	SEPARATOR OIL
•	1	PREFILTER 15-26/C67
•	1	UNLOADER VALVE KIT
•	1	CHECK VALVE G1/8 6X4 NOZZLE0,7
•	1	THERM.VALVE KIT 8000H STD

2200 9035 43 - KIT 8000H - 20-25HP - DIRECT DRIVEN - WITHOUT DRYER

(MODEL:CPVD21_18J , MODEL:CPVD25_18J) + DRIVETYPE:DIRECT + IDRY:N

	Qty	Name
•	1	AIR FILTER ELEM.
•	1	OIL FILTER
•	1	SEPARATOR OIL
•	1	PREFILTER 15-26/C67
•	2	FILTER AIR 221 X 221 X 18

continues on next page ...

... continued from previous page

2200 9035 43 - KIT 8000H - 20-25HP - DIRECT DRIVEN - WITHOUT DRYER

(MODEL:CPVD21_18J , MODEL:CPVD25_18J) + DRIVETYPE:DIRECT + IDRY:N

	Qty	Name
•	4	GREASE SCREWG. SLIDE AMBER
•	1	UNLOADER VALVE KIT
•	1	CHECK VALVE G1/8 6X4 NOZZLE0,7
•	1	THERM.VALVE KIT 8000H STD

2200 9035 40 - KIT 8000H - 20-25HP - GEAR DRIVEN - WITH DRYER

(MODEL:CPBG20_18J , MODEL:CPBG25_18J) + DRIVETYPE:GEAR + IDRY:Y

	Qty	Name
•	1	AIR FILTER ELEM.
•	1	OIL FILTER
•	1	SEPARATOR OIL
•	1	PREFILTER 15-26/C67
•	1	KIT WEAR DRAIN
•	1	UNLOADER VALVE KIT
•	1	CHECK VALVE G1/8 6X4 NOZZLE0,7
•	1	THERM.VALVE KIT 8000H STD

2200 9035 44 - KIT 8000H - 20-25HP - DIRECT DRIVEN - WITH DRYER

(MODEL:CPVD21_18J , MODEL:CPVD25_18J) + DRIVETYPE:DIRECT + IDRY:Y

	Qty	Name
•	1	AIR FILTER ELEM.
•	1	OIL FILTER
•	1	SEPARATOR OIL
•	1	PREFILTER 15-26/C67
•	1	KIT WEAR DRAIN
•	2	FILTER AIR 221 X 221 X 18
•	4	GREASE SCREWG. SLIDE AMBER
•	1	UNLOADER VALVE KIT
•	1	CHECK VALVE G1/8 6X4 NOZZLE0,7
•	1	THERM.VALVE KIT 8000H STD

2200 9035 41 - KIT 8000H - 30-35HP - GEAR DRIVEN - WITHOUT DRYER

(MODEL:CPBG29_18J , MODEL:CPBG34_18J) + DRIVETYPE:GEAR + IDRY:N

	Qty	Name
•	1	AIR FILTER ELEM.
•	1	OIL FILTER
•	1	SEPARATOR OIL
•	1	PREFILTER 15-26/C67
•	1	UNLOADER VALVE KIT
•	1	CHECK VALVE G1/8 6X4 NOZZLE0,7
•	1	THERM.VALVE KIT 8000H STD

2200 9035 45 - KIT 8000H - 30-35HP - DIRECT DRIVEN - WITHOUT DRYER

(MODEL:CPVD29_18J , MODEL:CPVD34_18J) + DRIVETYPE:DIRECT + IDRY:N

	Qty	Name
•	1	AIR FILTER ELEM.
•	1	OIL FILTER
•	1	SEPARATOR OIL
•	1	PREFILTER 15-26/C67
•	2	FILTER AIR 221 X 221 X 18
•	4	GREASE SCREWG. SLIDE AMBER
•	1	UNLOADER VALVE KIT

continues on next page ...

... continued from previous page

2200 9035 45 - KIT 8000H - 30-35HP - DIRECT DRIVEN - WITHOUT DRYER

(MODEL:CPVD29_18J , MODEL:CPVD34_18J) + DRIVETYPE:DIRECT + IDRY:N

	Qty	Name
•	1	CHECK VALVE G1/8 6X4 NOZZLE0,7
•	1	THERM.VALVE KIT 8000H STD

2200 9035 42 - KIT 8000H - 30-35HP - GEAR DRIVEN - WITH DRYER

(MODEL:CPBG29_18J , MODEL:CPBG34_18J) + DRIVETYPE:GEAR + IDRY:Y

	Qty	Name
•	1	AIR FILTER ELEM.
•	1	OIL FILTER
•	1	SEPARATOR OIL
•	1	PREFILTER 15-26/C67
•	1	KIT WEAR DRAIN
•	1	UNLOADER VALVE KIT
•	1	CHECK VALVE G1/8 6X4 NOZZLE0,7
•	1	THERM.VALVE KIT 8000H STD

2200 9035 46 - KIT 8000H - 30-35HP - DIRECT DRIVEN - WITH DRYER

(MODEL:CPVD29_18J , MODEL:CPVD34_18J) + DRIVETYPE:DIRECT + IDRY:Y

	Qty	Name
•	1	AIR FILTER ELEM.
•	1	OIL FILTER
•	1	SEPARATOR OIL
•	1	PREFILTER 15-26/C67
•	1	KIT WEAR DRAIN
•	2	FILTER AIR 221 X 221 X 18
•	4	GREASE SCREWG. SLIDE AMBER
•	1	UNLOADER VALVE KIT
•	1	CHECK VALVE G1/8 6X4 NOZZLE0,7
•	1	THERM.VALVE KIT 8000H STD

2901 3531 00 - THERMOSTATIC VALVE KIT - 8000H

	Qty	Name
•	1	O-RING 34 X 1.5
•	1	THERMOSTATIC VALVE 60 C
•	1	ASSEMBLY VALVE
•	1	SPRING COMPRESSION
•	1	O-RING 26,7 X 1,78 FKM
•	1	PISTON
•	1	SPRING COMPRESSION
•	1	O-RING 46 X 3 FKM
•	1	TUBE GREASE
•	1	INSTR KIT VALVE MIN PRESS/THER
•	1	O-RING 35.1X1.6 FPM

2204 1546 01 - CHECK VALVE KIT

	Qty	Name

2901 5005 00 - SHAFT SEAL KIT - GEAR DRIVEN

(MODEL:CPBG20_18J , MODEL:CPBG25_18J , MODEL:CPBG29_18J , MODEL:CPBG34_18J) + DRIVETYPE:GEAR

	Qty	Name
•	1	LIP SEAL KIT
•	1	BUSHING
•	1	O-RING 264X3

continues on next page ...

... continued from previous page

2901 5005 00 - SHAFT SEAL KIT - GEAR DRIVEN

(MODEL:CPBG20_18J , MODEL:CPBG25_18J , MODEL:CPBG29_18J , MODEL:CPBG34_18J) + DRIVETYPE:GEAR

	Qty	Name
•	1	INSTRUCTION DRIVE TRAIN

2901 9904 16 - SHAFT SEAL KIT - DIRECT DRIVEN

(MODEL:CPVD21_18J , MODEL:CPVD25_18J , MODEL:CPVD29_18J , MODEL:CPVD34_18J) + DRIVETYPE:DIRECT

	Qty	Name
•	1	LIP SEAL
•	1	BUSHING
•	1	O-RING

2901 0002 01 - UNLOADER VALVE KIT

	Qty	Name
•	1	LOCKNUT M8 (FZB)
•	1	CIRCLIPS ANELLO ELASTICO
•	1	CIRCLIP
•	1	FLAP GASKET
•	1	O-RING 10X1 VITON
•	2	O-RING
•	1	O-RING
•	1	O-RING 35.1X1.6 FPM
•	1	O-RING
•	1	GASKET
•	1	SPRING
•	1	PISTON
•	1	SPRING
•	2	PISTON RING
•	1	PLATE
•	1	VALVE
•	1	INSTR. GA11-22 UNLOADER
•	1	SERVICE DIAGRAM

2200 9020 17 - KIT WEAR DRAIN

	Qty	Name

2901 3640 07 - ELEMENT MOUNTING KIT - GEAR DRIVEN

(MODEL:CPBG20_18J , MODEL:CPBG25_18J , MODEL:CPBG29_18J , MODEL:CPBG34_18J) + DRIVETYPE:GEAR

	Qty	Name
•	1	O-RING D.89,5 X 3 FPM
•	1	O-RING 11,8X1,8 FKM
•	1	O-RING 36,2X3 VITON
•	1	O-RING 240X3 VITON
•	1	O-RING 49,5X3
•	1	SEAL WASHER DOWTY 1/2"
•	1	INSTR.ELEM.MOUNT.KIT BP C67 GD

2901 3640 08 - ELEMENT MOUNTING KIT - DIRECT DRIVEN

(MODEL:CPVD21_18J , MODEL:CPVD25_18J , MODEL:CPVD29_18J , MODEL:CPVD34_18J) + DRIVETYPE:DIRECT

	Qty	Name
•	1	O-RING D.89,5 X 3 FPM
•	1	O-RING 11,8X1,8 FKM
•	1	O-RING 36,2X3 VITON
•	1	O-RING 49,5X3
•	1	SEAL WASHER DOWTY 1/2"

continues on next page ...

... continued from previous page

2901 3640 08 - ELEMENT MOUNTING KIT - DIRECT DRIVEN

(MODEL:CPVD21_18J , MODEL:CPVD25_18J , MODEL:CPVD29_18J , MODEL:CPVD34_18J) + DRIVETYPE:DIRECT

	Qty	Name
•	1	INS.ELEM.MOUNT.KIT BP C67BD-DD

2200 9032 20 - MOTOR BEARING KIT - GEAR DRIVEN

(MODEL:CPBG20_18J , MODEL:CPBG25_18J , MODEL:CPBG29_18J , MODEL:CPBG34_18J) + DRIVETYPE:GEAR

Qty	Name

2901 3640 09 - MOTOR BEARING KIT - DIRECT DRIVEN

(MODEL:CPVD21_18J , MODEL:CPVD25_18J , MODEL:CPVD29_18J , MODEL:CPVD34_18J) + DRIVETYPE:DIRECT

Qty	Name

3001 1500 39 - ELEMENT OVERHAUL KIT - GEAR DRIVEN

(MODEL:CPBG20_18J , MODEL:CPBG25_18J , MODEL:CPBG29_18J , MODEL:CPBG34_18J) + DRIVETYPE:GEAR

	Qty	Name
•	2	ROLLER BEARING
•	1	O-RING
•	8	HEX. HEAD SCREW M8 X 30
•	1	ROLLER BEARING
•	1	BALL BEARING
•	1	ROLLER BEARING
•	1	BALL BEARING
•	1	HEXAGON BOLT M8X60

3001 1500 38 - ELEMENT OVERHAUL KIT - DIRECT DRIVEN

(MODEL:CPVD21_18J , MODEL:CPVD25_18J , MODEL:CPVD29_18J , MODEL:CPVD34_18J) + DRIVETYPE:DIRECT

	Qty	Name
•	2	ROLLER BEARING
•	1	O-RING
•	8	HEX. HEAD SCREW M8 X 30
•	1	ROLLER BEARING
•	1	BALL BEARING
•	1	O-RING
•	1	LIP SEAL
•	1	BUSHING
•	1	ROLLER BEARING
•	1	BALL BEARING
•	2	SCREW
•	1	HEX. HEAD SCREW M8 X 20
•	1	SCREW

Legend:

DRIVETYPE:DIRECT - Drive type:Direct	DRIVETYPE:GEAR - Drive type:Gear	IDRY:N - Integrated dryer:No
IDRY:Y - Integrated dryer:Yes	MODEL:CPBG20_18J - Model:CPBg 20	MODEL:CPBG25_18J - Model:CPBg 25
MODEL:CPBG29_18J - Model:CPBg 29	MODEL:CPBG34_18J - Model:CPBg 34	MODEL:CPVD21_18J - Model:CPVSd 21
MODEL:CPVD25_18J - Model:CPVSd 25	MODEL:CPVD29_18J - Model:CPVSd 29	MODEL:CPVD34_18J - Model:CPVSd 34

Ref	Part Number	Qty	Name	Validity
	6215 7140 00	1	ROTAIR 5L	
	6215 7141 00	1	ROTAIR 20L	
	6215 7142 00	1	ROTAIR 209L	
	~~6215 7144 00~~	1	ROTAIR PLUS 5L	
	Substituted by:	1630 1444 05 - OIL ROTAIR PLUS 5L (quantity: 1)		
	~~6215 7145 00~~	1	ROTAIR PLUS 20L	
	Substituted by:	1630 1444 20 - OIL ROTAIR PLUS 20L (quantity: 1)		
	~~6215 7146 00~~	1	ROTAIR PLUS 209L	
	Substituted by:	1630 1444 29 - OIL ROTAIR PLUS 209L (quantity: 1)		
	6215 7148 00	1	ROTAIR XTRA 5L	
	6215 7149 00	1	ROTAIR XTRA 20L	
	6215 7150 00	1	ROTAIR XTRA 209L	
	~~6215 7152 00~~	1	ROTAIR FOOD GRADE 5L	
	Substituted by:	1630 0821 00 - OIL ROTAIR FOOD GRADE 5L (quantity: 1)		
	~~6215 7153 00~~	1	ROTAIR FOOD GRADE 20L	
	Substituted by:	1630 0605 00 - CAN ROTAIR FOODGRADE 20L (quantity: 1)		
	~~6215 7154 00~~	1	ROTAIR FOOD GRADE 209L	
	Substituted by:	1630 0821 01 - OIL ROTAIR FOOD GRADE 209L (quantity: 1)		

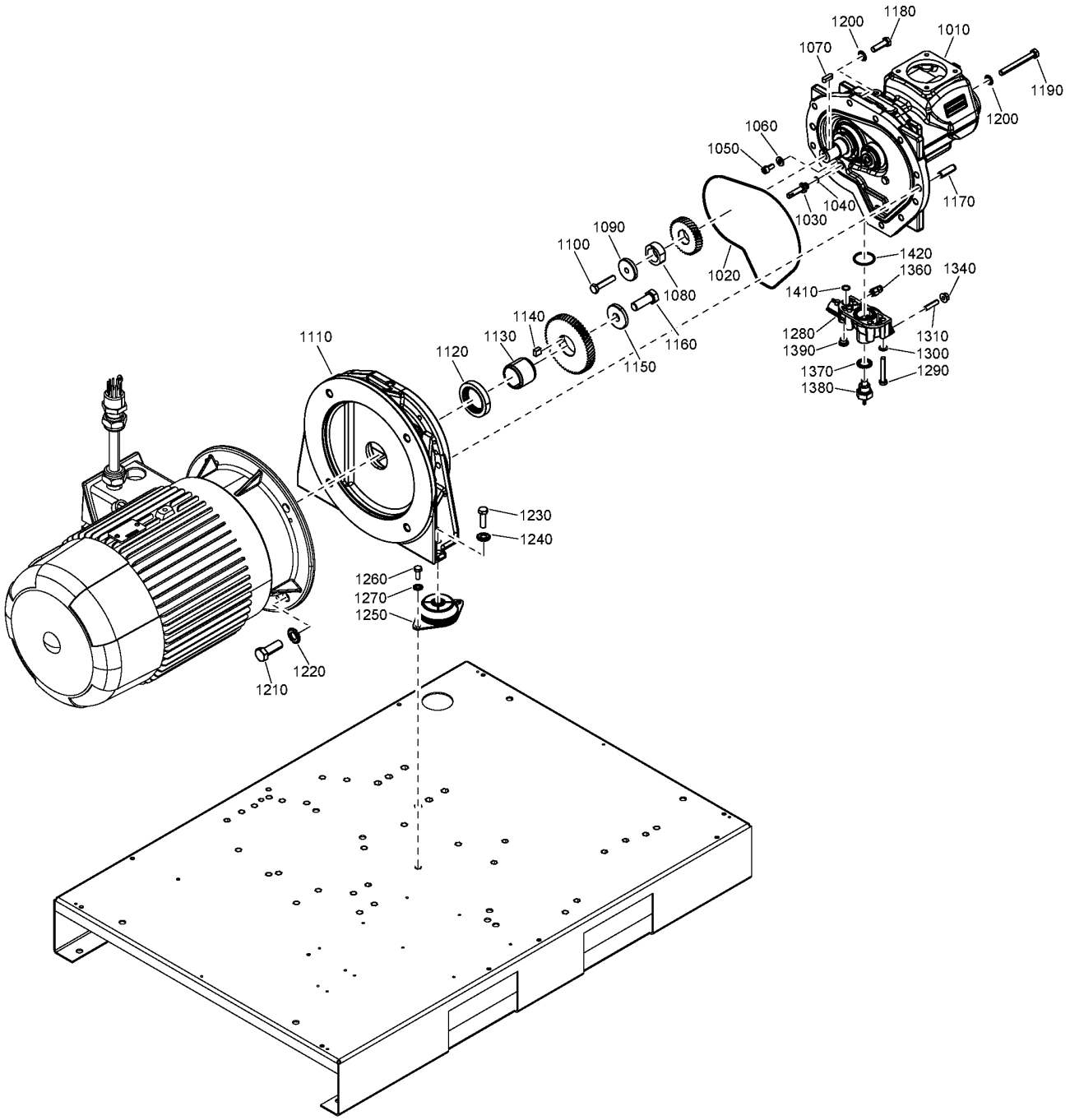
1180
1200
1010
1070
1190
1200
1060
1050
1170
1040
1030
1090
1100
1420
1360
1340
1020
1410
1080
1140
1280
1310
1110
1130
1160
1390
1300
1120
1150
1370
1290
1380
1230
1240
1260
1270
1250
1220
1210

Ref	Part Number	Qty	Name	Validity
1010	1616 7745 90	1	SPARE ELEMENT OIS H-10	(21/08/2018 - ...)
	Substituted by:	1616 7745 90 - SPARE ELEMENT OIS H-10 (quantity: 1)		
1020		1	O-RING	(21/08/2018 - ...)
	Service kits:	2901 3640 07 - ELEMENT MOUNTING KIT - GEAR DRIVEN		
1030	2204 1452 00	1	NOZZLE	(21/08/2018 - ...)
1040	0663 7116 00	1	O-RING	(21/08/2018 - ...)
1050	0211 1322 03	1	HEXAGON SOCKET SCREW	(21/08/2018 - ...)
1060	2204 1453 00	1	WASHER	(21/08/2018 - ...)
1070	0337 8103 00	1	PARALLEL KEY	(21/08/2018 - ...)
1080	2204 1408 00	1	SPACER	(21/08/2018 - ...)
1090	1622 3401 00	1	WASHER	(21/08/2018 - ...)
1100	0147 1367 03	1	HEXAGON BOLT	(21/08/2018 - ...)
1110	1629 0072 12	1	GEARBOX	(21/08/2018 - ...)
1120		1	SEAL RING	(21/08/2018 - ...)
	Substituted by:	1616 5742 80 - SEAL RING KIT (quantity: 1)		
	Service kits:	2901 5005 00 - SHAFT SEAL KIT - GEAR DRIVEN		
1130		1	BUSHING	(21/08/2018 - ...)
	Service kits:	2901 5005 00 - SHAFT SEAL KIT - GEAR DRIVEN		
1140	0337 0009 42	1	PARALLEL KEY	(21/08/2018 - ...)
1150	1622 0010 00	1	WASHER	(21/08/2018 - ...)
1160	0147 1478 03	1	HEXAGON HEAD SCREW	(21/08/2018 - ...)
1170	0101 2465 00	2	PARALLEL PIN	(21/08/2018 - ...)
1180	0147 1364 03	9	SCREW	(21/08/2018 - ...)
1190	0147 1375 03	1	HEXAGON BOLT	(21/08/2018 - ...)
1200	~~6210 0364 00~~	10	WASHER	(21/08/2018 - ...)
	Substituted by:	0333 3100 07 - SC LOCK WASHER 10.2-22-2.7 FZB (quantity: 1)		
1210	0147 1478 03	4	HEXAGON HEAD SCREW	(21/08/2018 - ...)
1220	~~6210 0367 00~~	4	WASHER	(21/08/2018 - ...)
	Substituted by:	0333 3100 10 - SC LOCK WASHER 16.4-32-4.1 FZB (quantity: 1)		
1230	0147 1364 03	2	SCREW	(21/08/2018 - ...)
1240	~~6210 0364 00~~	2	WASHER	(21/08/2018 - ...)
	Substituted by:	0333 3100 07 - SC LOCK WASHER 10.2-22-2.7 FZB (quantity: 1)		
1250	1613 6752 31	2	ANIT-VIBRATION PAD	(21/08/2018 - ...)
1260	0147 1325 03	4	HEXAGON HEAD SCREW	(21/08/2018 - ...)
1270	2202 9045 01	4	WASHER	(21/08/2018 - ...)
1280	1629 0072 36	1	OUTLET FLANGE	(21/08/2018 - ...)
1290	0147 1331 03	4	HEXAGON BOLT	(21/08/2018 - ...)
1300	0301 2335 00	4	PLAIN WASHER	(21/08/2018 - ...)
1310	0190 1327 00	2	SET SCREW	(21/08/2018 - ...)
1340	0291 1185 30	2	NUT	(21/08/2018 - ...)
1360		1	CHECK VALVE	(21/08/2018 - ...)
	Service kits:	2200 9035 42 - KIT 8000H - 30-35HP - GEAR DRIVEN - WITH DRYER 2200 9035 41 - KIT 8000H - 30-35HP - GEAR DRIVEN - WITHOUT DRYER 2200 9035 40 - KIT 8000H - 20-25HP - GEAR DRIVEN - WITH DRYER 2200 9035 39 - KIT 8000H - 20-25HP - GEAR DRIVEN - WITHOUT DRYER		
1370		1	SEAL WASHER	(21/08/2018 - ...)
	Service kits:	2901 3640 07 - ELEMENT MOUNTING KIT - GEAR DRIVEN		
1380	2204 1417 00	1	TEMPERATURE SENSOR PT1000	(21/08/2018 - ...)
1390	0686 3718 12	1	PLUG	(21/08/2018 - ...)
1410		1	O-RING	(21/08/2018 - ...)
	Service kits:	2901 3640 07 - ELEMENT MOUNTING KIT - GEAR DRIVEN		
1420		1	O-RING	(21/08/2018 - ...)
	Service kits:	2901 3640 07 - ELEMENT MOUNTING KIT - GEAR DRIVEN		

Legend:

MODEL:CPBG20_18J - Model:CPBg 20
MODEL:CPBG25_18J - Model:CPBg 25
MODEL:CPBG29_18J - Model:CPBg 29
MODEL:CPBG34_18J - Model:CPBg 34

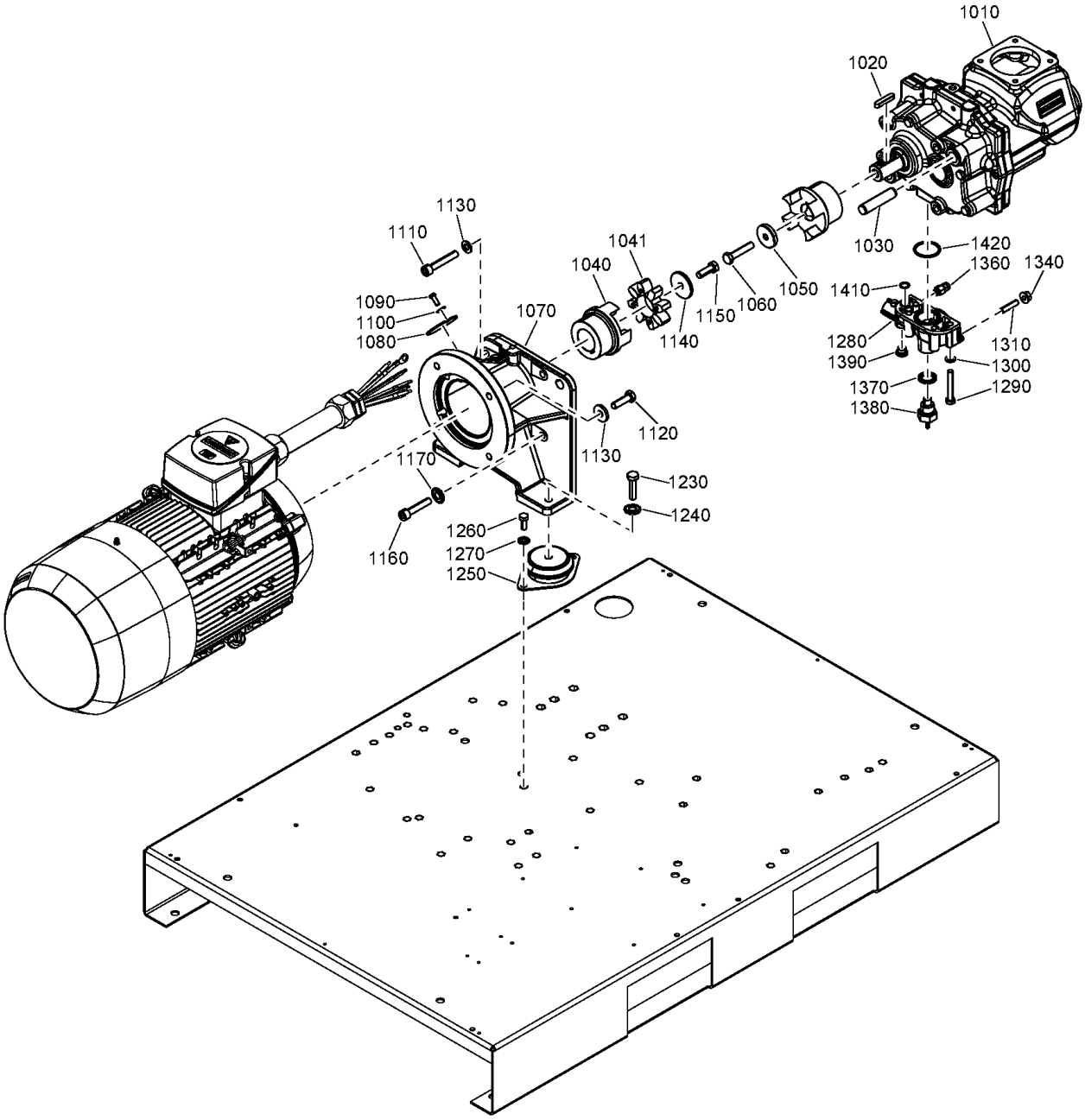
1010
1020
1130
1110
1041
1040
1030
1420
1360
1340
1410
1050
1060
1150
1140
1090
1100
1080
1070
1280
1390
1310
1300
1370
1290
1380
1120
1130
1170
1230
1240
1260
1270
1250
1160

Ref	Part Number	Qty	Name	Validity
1010	1616 7745 91	1	SPARE ELEMENT OIS H-11	(22/08/2018 - ...)
	Substituted by:	1616 7745 91 - SPARE ELEMENT OIS H-11 (quantity: 1)		
1020	0337 7113 00	1	PARALLEL KEY	(22/08/2018 - ...)
1030	0101 2311 63	2	PARALLEL PIN	(22/08/2018 - ...)
1040	2204 1547 00	1	COUPLING	(22/08/2018 - ...)
1041	• 2204 1547 50	1	SPIDER ELASTIC COUPLING	
1050	2204 1686 00	1	SPACER	(22/08/2018 - ...)
1060	0147 1367 03	1	HEXAGON BOLT	(22/08/2018 - ...)
1070	2204 1557 00	1	COUPLING	(22/08/2018 - ...)
1080	2204 1069 00	1	COVER	(22/08/2018 - ...)
1090	0215 0003 91	1	SCREW	(22/08/2018 - ...)
1100	~~6210 0362 00~~	1	WASHER	(22/08/2018 - ...)
	Substituted by:	0333 3100 05 - SC LOCK WASHER 6.1-14-2.1 FZB (quantity: 1)		
1110	0211 1369 03	2	HEXAGON SOCKET SCREW	(22/08/2018 - ...)
1120	0211 1367 03	2	HEXAGON SOCKET SCREW	(22/08/2018 - ...)
1130	0333 4232 00	4	WASHER	(22/08/2018 - ...)
1140	2204 1104 00	1	WASHER	(22/08/2018 - ...)
1150	0147 1363 03	1	SCREW	(22/08/2018 - ...)
1160	0147 1364 03	4	SCREW	(22/08/2018 - ...)
1170	~~6210 0364 00~~	4	WASHER	(22/08/2018 - ...)
	Substituted by:	0333 3100 07 - SC LOCK WASHER 10.2-22-2.7 FZB (quantity: 1)		
1230	0147 1365 03	2	SCREW	(22/08/2018 - ...)
1240	~~6210 0364 00~~	2	WASHER	(22/08/2018 - ...)
	Substituted by:	0333 3100 07 - SC LOCK WASHER 10.2-22-2.7 FZB (quantity: 1)		
1250	1613 6752 31	2	ANTI-VIBRATION PAD	(22/08/2018 - ...)
1260	0147 1325 03	4	HEXAGON HEAD SCREW	(22/08/2018 - ...)
1270	2202 9045 01	4	WASHER	(22/08/2018 - ...)
1280	1629 0072 36	1	OUTLET FLANGE	(22/08/2018 - ...)
1290	0147 1331 03	4	HEXAGON BOLT	(22/08/2018 - ...)
1300	0301 2335 00	4	PLAIN WASHER	(22/08/2018 - ...)
1310	0190 1327 00	2	SET SCREW	(22/08/2018 - ...)
1340	0291 1185 30	2	NUT	(22/08/2018 - ...)
1360		1	CHECK VALVE	(22/08/2018 - ...)
	Service kits:	2200 9035 46 - KIT 8000H - 30-35HP - DIRECT DRIVEN - WITH DRYER 2200 9035 45 - KIT 8000H - 30-35HP - DIRECT DRIVEN - WITHOUT DRYER 2200 9035 44 - KIT 8000H - 20-25HP - DIRECT DRIVEN - WITH DRYER 2200 9035 43 - KIT 8000H - 20-25HP - DIRECT DRIVEN - WITHOUT DRYER		
1370		2	SEAL WASHER	(22/08/2018 - ...)
	Service kits:	2901 3640 08 - ELEMENT MOUNTING KIT - DIRECT DRIVEN		
1380	2204 1417 00	1	TEMPERATURE SENSOR PT1000	(22/08/2018 - ...)
1390	0686 3718 12	1	PLUG	(22/08/2018 - ...)
1410		1	O-RING	(22/08/2018 - ...)
	Service kits:	2901 3640 08 - ELEMENT MOUNTING KIT - DIRECT DRIVEN		
1420		1	O-RING	(22/08/2018 - ...)
	Service kits:	2901 3640 08 - ELEMENT MOUNTING KIT - DIRECT DRIVEN		

Legend:

MODEL:CPVD21_18J - Model:CPVSd 21
MODEL:CPVD25_18J - Model:CPVSd 25
MODEL:CPVD29_18J - Model:CPVSd 29
MODEL:CPVD34_18J - Model:CPVSd 34

5 - Motor assembly CPBg 20-34 - Gear driven

((MOVOL:200230460V , MOVOL:230V , MOVOL:380V , MOVOL:440V , MOVOL:575V) + FREQ:60HZ , (MOVOL:230V , MOVOL:400V) + FREQ:50HZ) + (MODEL:CPBG20_18J , MODEL:CPBG25_18J , MODEL:CPBG29_18J , MODEL:CPBG34_18J)

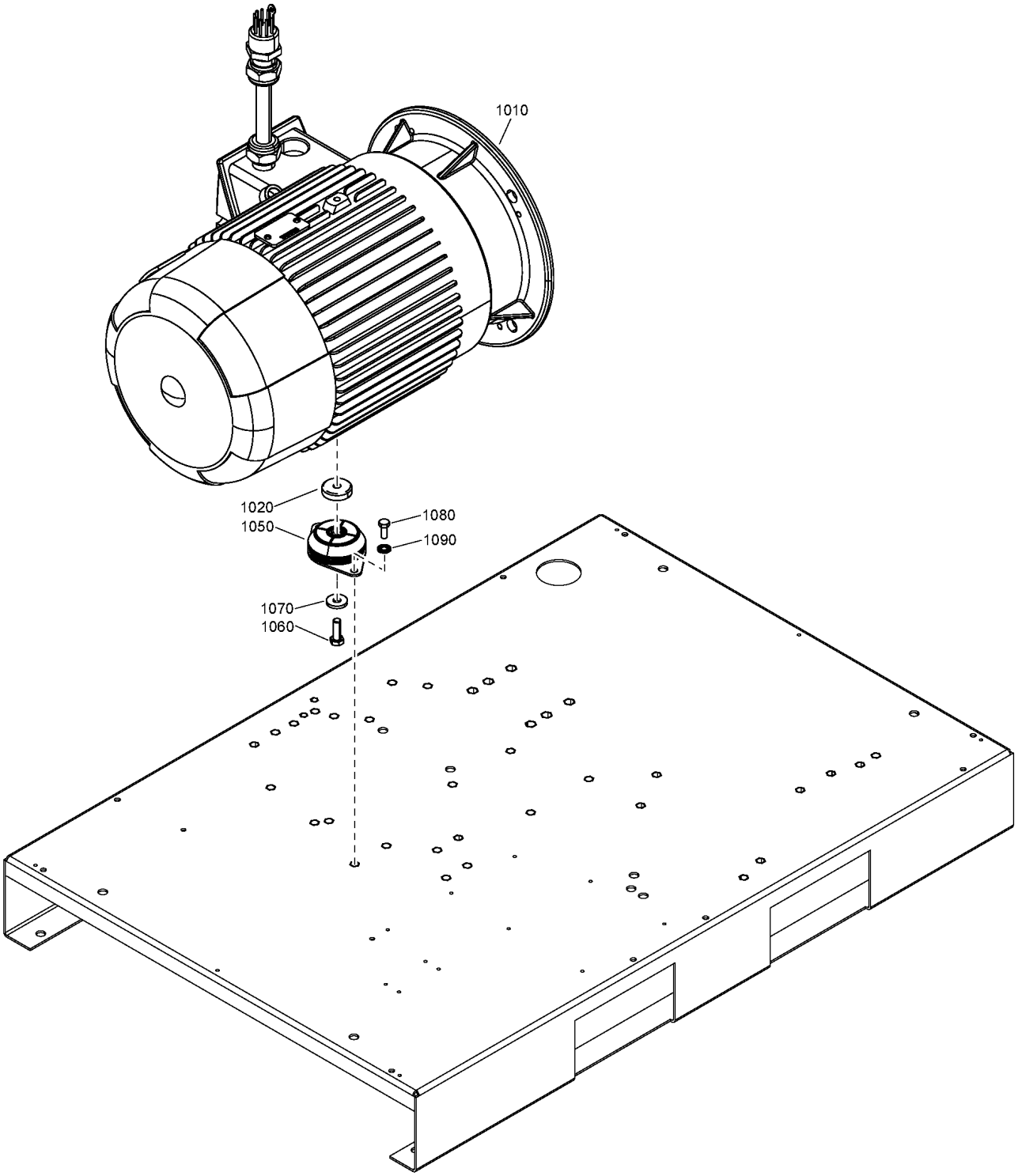

5 - Motor assembly CPBg 20-34 - Gear driven

((MOVOL:200230460V , MOVOL:230V , MOVOL:380V , MOVOL:440V , MOVOL:575V) + FREQ:60HZ , (MOVOL:230V , MOVOL:400V) + FREQ:50HZ) + (MODEL:CPBG20_18J , MODEL:CPBG25_18J , MODEL:CPBG29_18J , MODEL:CPBG34_18J)

Ref	Part Number	Qty	Name	Validity
1010	2204 1163 00	1	MOTOR	**(21/08/2018 - ...)** FREQ:60HZ + MODEL:CPBG20_18J + MOVOL:575V
1010	2204 1067 00	1	MOTOR	**(21/08/2018 - ...)** FREQ:60HZ + MODEL:CPBG34_18J + MOVOL:575V
1010	2204 1003 00	1	MOTOR	**(21/08/2018 - ...)** FREQ:50HZ + MODEL:CPBG29_18J + MOVOL:400V
1010	2204 1165 00	1	MOTOR	**(21/08/2018 - ...)** FREQ:50HZ + MODEL:CPBG25_18J + MOVOL:230V
1010	2204 1162 00	1	MOTOR	**(21/08/2018 - ...)** (MOVOL:200230460V , MOVOL:230V , MOVOL:440V) + FREQ:60HZ + MODEL:CPBG20_18J
1010	2204 1172 00	1	MOTOR	**(21/08/2018 - ...)** FREQ:60HZ + MODEL:CPBG29_18J + MOVOL:380V
1010	2204 1001 00	1	MOTOR	**(21/08/2018 - ...)** FREQ:50HZ + MODEL:CPBG20_18J + MOVOL:400V
1010	2204 1065 00	1	MOTOR	**(21/08/2018 - ...)** (MOVOL:200230460V , MOVOL:230V , MOVOL:440V) + FREQ:60HZ + MODEL:CPBG34_18J
1010	2204 1167 00	1	MOTOR	**(21/08/2018 - ...)** FREQ:60HZ + MODEL:CPBG25_18J + MOVOL:575V
1010	2204 1169 00	1	MOTOR	**(21/08/2018 - ...)** FREQ:50HZ + MODEL:CPBG29_18J + MOVOL:230V
1010	2204 1066 00	1	MOTOR	**(21/08/2018 - ...)** FREQ:50HZ + MODEL:CPBG34_18J + MOVOL:400V
1010	2204 1166 00	1	MOTOR	**(21/08/2018 - ...)** (MOVOL:200230460V , MOVOL:230V , MOVOL:440V) + FREQ:60HZ + MODEL:CPBG25_18J
1010	2204 1171 00	1	MOTOR	**(21/08/2018 - ...)** FREQ:60HZ + MODEL:CPBG29_18J + MOVOL:575V
1010	2204 1164 00	1	MOTOR	**(21/08/2018 - ...)** FREQ:60HZ + MODEL:CPBG20_18J + MOVOL:380V
1010	2204 1174 00	1	MOTOR	**(21/08/2018 - ...)** FREQ:60HZ + MODEL:CPBG34_18J + MOVOL:380V
1010	2204 1161 00	1	MOTOR	**(21/08/2018 - ...)** FREQ:50HZ + MODEL:CPBG20_18J + MOVOL:230V
1010	2204 1002 00	1	MOTOR	**(21/08/2018 - ...)** FREQ:50HZ + MODEL:CPBG25_18J + MOVOL:400V
1010	2204 1170 00	1	MOTOR	**(21/08/2018 - ...)** (MOVOL:200230460V , MOVOL:230V , MOVOL:440V) + FREQ:60HZ + MODEL:CPBG29_18J
1010	2204 1173 00	1	MOTOR	**(21/08/2018 - ...)** FREQ:50HZ + MODEL:CPBG34_18J + MOVOL:230V
1010	2204 1168 00	1	MOTOR	**(21/08/2018 - ...)** FREQ:60HZ + MODEL:CPBG25_18J + MOVOL:380V
1020	6224 4311 00	1	SPACER	**(21/08/2018 - ...)**
1050	1613 6752 32	1	ANTI-VIBRATION PAD	**(21/08/2018 - ...)**
1060	0147 1366 03	1	HEXAGON HEAD SCREW	**(21/08/2018 - ...)**
1070	~~6210 0364 00~~	1	WASHER	**(21/08/2018 - ...)**
	Substituted by:	0333 3100 07 - SC LOCK WASHER 10.2-22-2.7 FZB (quantity: 1)		
1080	0147 1325 03	2	HEXAGON HEAD SCREW	**(21/08/2018 - ...)**
1090	2202 9045 01	2	WASHER	**(21/08/2018 - ...)**

Legend:

FREQ:50HZ - Frequency:50 Hz
FREQ:60HZ - Frequency:60 Hz
MODEL:CPBG20_18J - Model:CPBg 20
MODEL:CPBG25_18J - Model:CPBg 25
MODEL:CPBG29_18J - Model:CPBg 29
MODEL:CPBG34_18J - Model:CPBg 34
MOVOL:200230460V - Supply voltage:200-230-460 V
MOVOL:230V - Supply voltage:230 V
MOVOL:380V - Supply voltage:380 V
MOVOL:400V - Supply voltage:400 V
MOVOL:440V - Supply voltage:440 V
MOVOL:575V - Supply voltage:575 V

6 - Motor assembly CPVSd 21-34 - Direct driven

((MOVOL:380V , MOVOL:440V , MOVOL:460V) + FREQ:60HZ , FREQ:50HZ + MOVOL:400V) + (MODEL:CPVD21_18J , MODEL:CPVD25_18J , MODEL:CPVD29_18J , MODEL:CPVD34_18J)

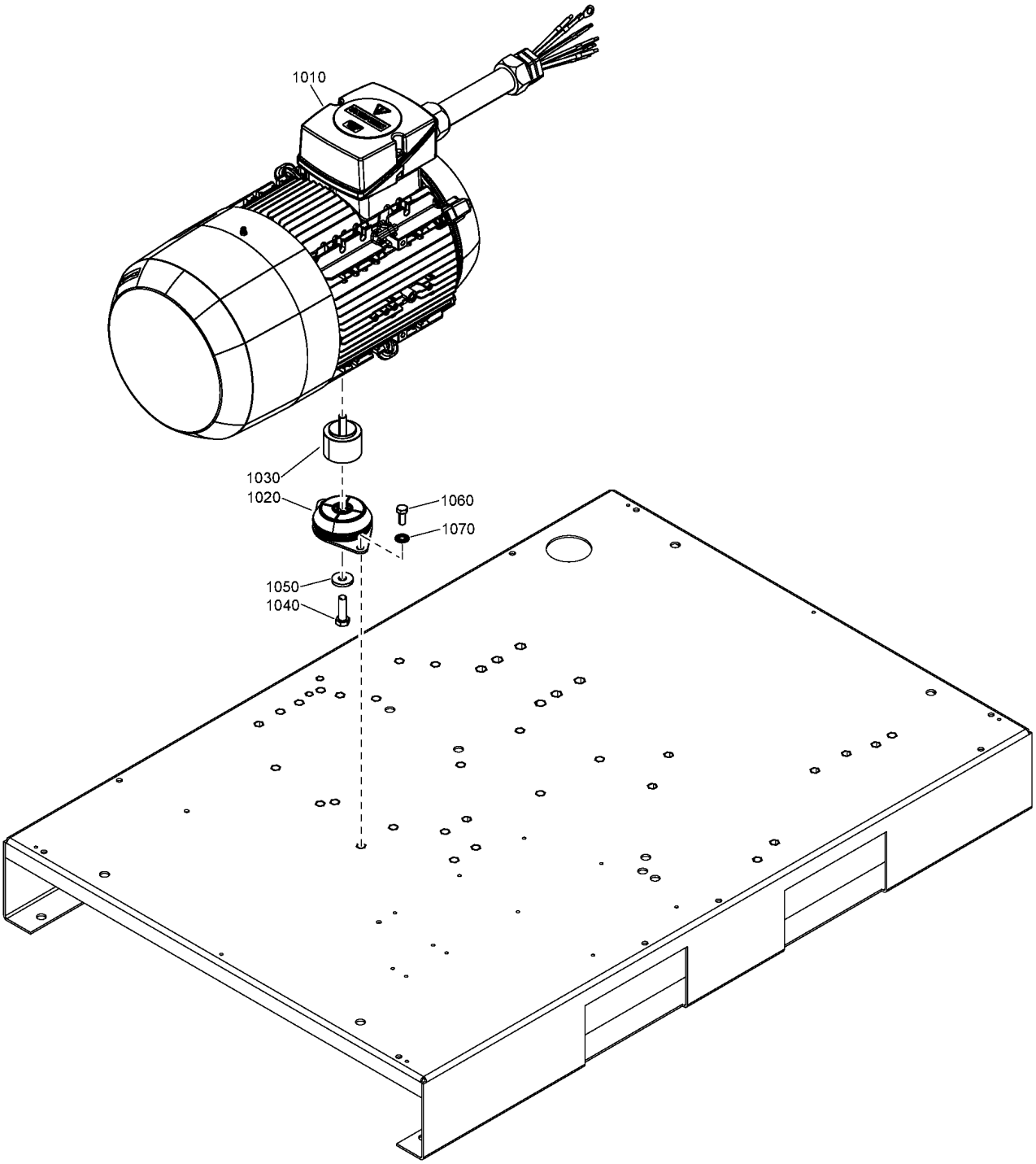

6 - Motor assembly CPVSd 21-34 - Direct driven

((MOVOL:380V , MOVOL:440V , MOVOL:460V) + FREQ:60HZ , FREQ:50HZ + MOVOL:400V) + (MODEL:CPVD21_18J , MODEL:CPVD25_18J , MODEL:CPVD29_18J , MODEL:CPVD34_18J)

Ref	Part Number	Qty	Name	Validity
1010	2204 1749 00	1	MOTOR	**(22/08/2018 - ...)** MODEL:CPVD29_18J
1010	2204 1751 00	1	MOTOR	**(22/08/2018 - ...)** MODEL:CPVD21_18J
1010	2204 1748 00	1	MOTOR	**(22/08/2018 - ...)** MODEL:CPVD34_18J
1010	2204 1750 00	1	MOTOR	**(22/08/2018 - ...)** MODEL:CPVD25_18J
1020	1613 6752 32	1	ANTI-VIBRATION PAD	**(22/08/2018 - ...)**
1030	2204 1177 01	1	SPACER	**(22/08/2018 - ...)**
1040	0147 1364 03	1	SCREW	**(22/08/2018 - ...)**
1050	~~6210 0364 00~~	1	WASHER	**(22/08/2018 - ...)**
	Substituted by:	0333 3100 07 - SC LOCK WASHER 10.2-22-2.7 FZB (quantity: 1)		
1060	0147 1325 03	2	HEXAGON HEAD SCREW	**(22/08/2018 - ...)**
1070	2202 9045 01	2	WASHER	**(22/08/2018 - ...)**

Legend:

FREQ:50HZ - Frequency:50 Hz
FREQ:60HZ - Frequency:60 Hz
MODEL:CPVD21_18J - Model:CPVSd 21
MODEL:CPVD25_18J - Model:CPVSd 25
MODEL:CPVD29_18J - Model:CPVSd 29
MODEL:CPVD34_18J - Model:CPVSd 34
MOVOL:380V - Supply voltage:380 V
MOVOL:400V - Supply voltage:400 V
MOVOL:440V - Supply voltage:440 V
MOVOL:460V - Supply voltage:460 V

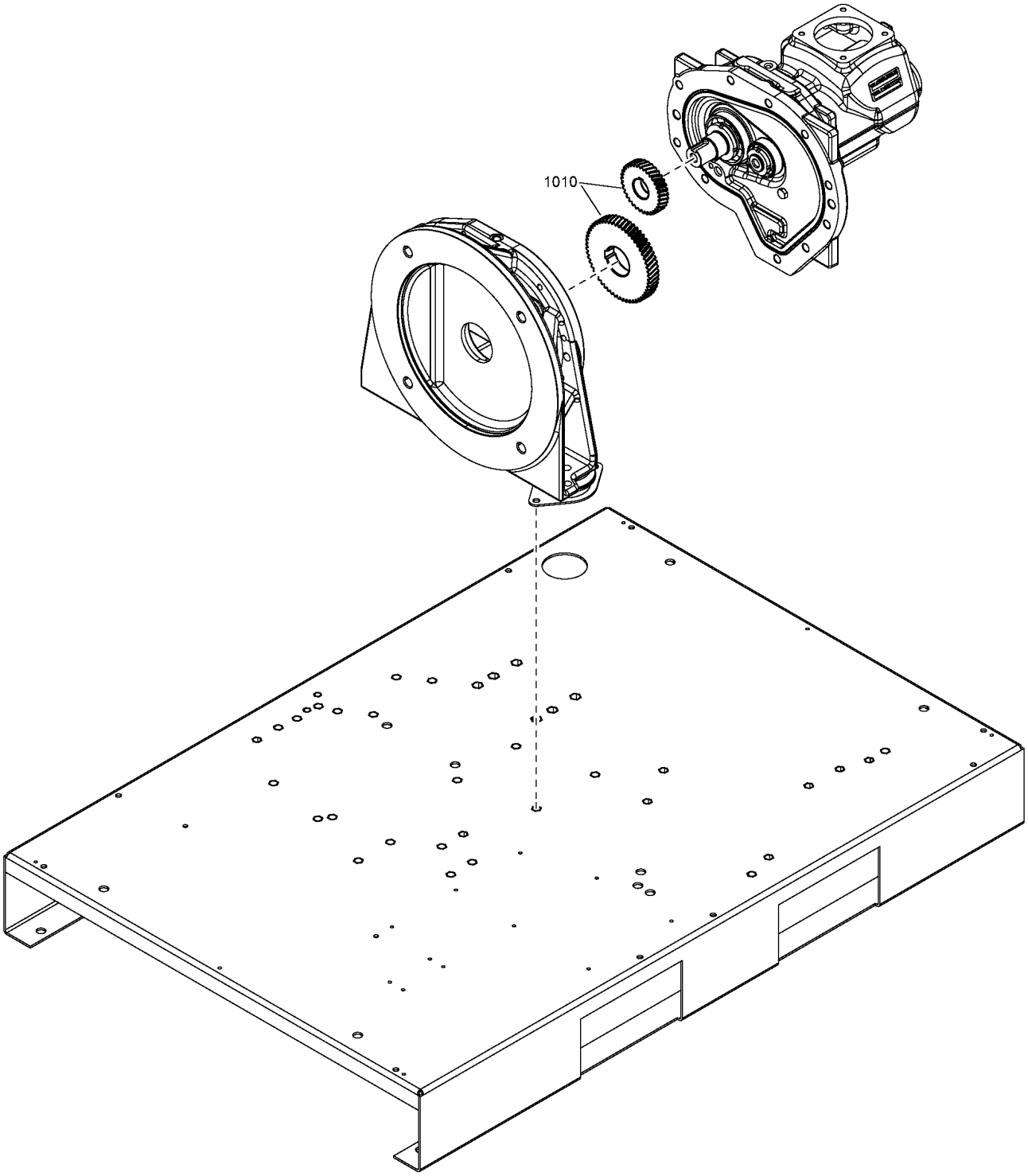
1010

Ref	Part Number	Qty	Name	Validity
1010	1629 0400 73	1	GEAR SET	**(21/08/2018 - ...)** ((PRESS:10.8BAR , PRESS:10BAR) + MODEL:CPBG34_18J , (PRESS:8.5BAR , PRESS:9.1BAR) + MODEL:CPBG29_18J) + FREQ:60HZ
1010	1629 0400 86	1	GEAR SET	**(21/08/2018 - ...)** ((PRESS:10.8BAR , PRESS:10BAR) + MODEL:CPBG20_18J , (PRESS:12.5BAR , PRESS:13BAR) + MODEL:CPBG25_18J) + FREQ:60HZ , FREQ:50HZ + MODEL:CPBG20_18J + PRESS:13BAR
1010	1629 0400 89	1	GEAR SET	**(21/08/2018 - ...)** (PRESS:12.5BAR , PRESS:13BAR) + FREQ:60HZ + MODEL:CPBG29_18J
1010	1629 0400 85	1	GEAR SET	**(21/08/2018 - ...)** ((PRESS:7.4BAR , PRESS:7.5BAR) + FREQ:60HZ , FREQ:50HZ + PRESS:10BAR) + MODEL:CPBG20_18J
1010	1629 0400 83	1	GEAR SET	**(21/08/2018 - ...)** (PRESS:7.4BAR , PRESS:7.5BAR) + FREQ:60HZ + MODEL:CPBG34_18J
1010	1629 0400 72	1	GEAR SET	**(21/08/2018 - ...)** (PRESS:8.5BAR , PRESS:9.1BAR) + FREQ:60HZ + MODEL:CPBG34_18J , FREQ:50HZ + MODEL:CPBG25_18J + PRESS:7.5BAR
1010	1629 0400 77	1	GEAR SET	**(21/08/2018 - ...)** ((PRESS:7.4BAR , PRESS:7.5BAR) + FREQ:60HZ , FREQ:50HZ + PRESS:10BAR) + MODEL:CPBG29_18J , (MODEL:CPBG25_18J + PRESS:8.5BAR , MODEL:CPBG34_18J + PRESS:13BAR) + FREQ:50HZ
1010	1629 0400 84	1	GEAR SET	**(21/08/2018 - ...)** FREQ:50HZ + MODEL:CPBG25_18J + PRESS:13BAR
1010	1629 0400 93	1	GEAR SET	**(21/08/2018 - ...)** FREQ:50HZ + MODEL:CPBG25_18J + PRESS:10BAR
1010	1629 0400 75	1	GEAR SET	**(21/08/2018 - ...)** FREQ:50HZ + MODEL:CPBG29_18J + PRESS:7.5BAR
1010	1629 0400 76	1	GEAR SET	**(21/08/2018 - ...)** (MODEL:CPBG29_18J + PRESS:8.5BAR , MODEL:CPBG34_18J + PRESS:10BAR) + FREQ:50HZ
1010	1629 0400 88	1	GEAR SET	**(21/08/2018 - ...)** ((PRESS:12.5BAR , PRESS:13BAR) + MODEL:CPBG34_18J , (PRESS:7.4BAR , PRESS:7.5BAR) + MODEL:CPBG25_18J) + FREQ:60HZ , FREQ:50HZ + MODEL:CPBG29_18J + PRESS:13BAR
1010	1629 0400 81	1	GEAR SET	**(21/08/2018 - ...)** FREQ:50HZ + MODEL:CPBG34_18J + PRESS:7.5BAR
1010	1629 0400 70	1	GEAR SET	**(21/08/2018 - ...)** (PRESS:8.5BAR , PRESS:9.1BAR) + FREQ:60HZ + MODEL:CPBG20_18J
1010	1629 0400 82	1	GEAR SET	**(21/08/2018 - ...)** FREQ:50HZ + MODEL:CPBG34_18J + PRESS:8.5BAR
1010	1629 0400 87	1	GEAR SET	**(21/08/2018 - ...)** (PRESS:12.5BAR , PRESS:13BAR) + FREQ:60HZ + MODEL:CPBG20_18J
1010	1629 0400 74	1	GEAR SET	**(21/08/2018 - ...)** FREQ:50HZ + MODEL:CPBG20_18J + PRESS:8.5BAR
1010	1629 0400 68	1	GEAR SET	**(21/08/2018 - ...)** ((PRESS:10.8BAR , PRESS:10BAR) + MODEL:CPBG29_18J , (PRESS:8.5BAR , PRESS:9.1BAR) + MODEL:CPBG25_18J) + FREQ:60HZ
1010	1629 0400 67	1	GEAR SET	**(21/08/2018 - ...)** FREQ:50HZ + MODEL:CPBG20_18J + PRESS:7.5BAR
1010	1629 0400 69	1	GEAR SET	**(21/08/2018 - ...)** (PRESS:10.8BAR , PRESS:10BAR) + FREQ:60HZ + MODEL:CPBG25_18J

Legend:

FREQ:50HZ - Frequency:50 Hz
FREQ:60HZ - Frequency:60 Hz
MODEL:CPBG20_18J - Model:CPBg 20
MODEL:CPBG25_18J - Model:CPBg 25
MODEL:CPBG29_18J - Model:CPBg 29
MODEL:CPBG34_18J - Model:CPBg 34
PRESS:10.8BAR - Working pressure:10.8 bar
PRESS:10BAR - Working pressure:10 bar
PRESS:12.5BAR - Working pressure:12.5 bar
PRESS:13BAR - Working pressure:13 bar
PRESS:7.4BAR - Working pressure:7.4 bar
PRESS:7.5BAR - Working pressure:7.5 bar
PRESS:8.5BAR - Working pressure:8.5 bar
PRESS:9.1BAR - Working pressure:9.1 bar

8.1 - Air filter

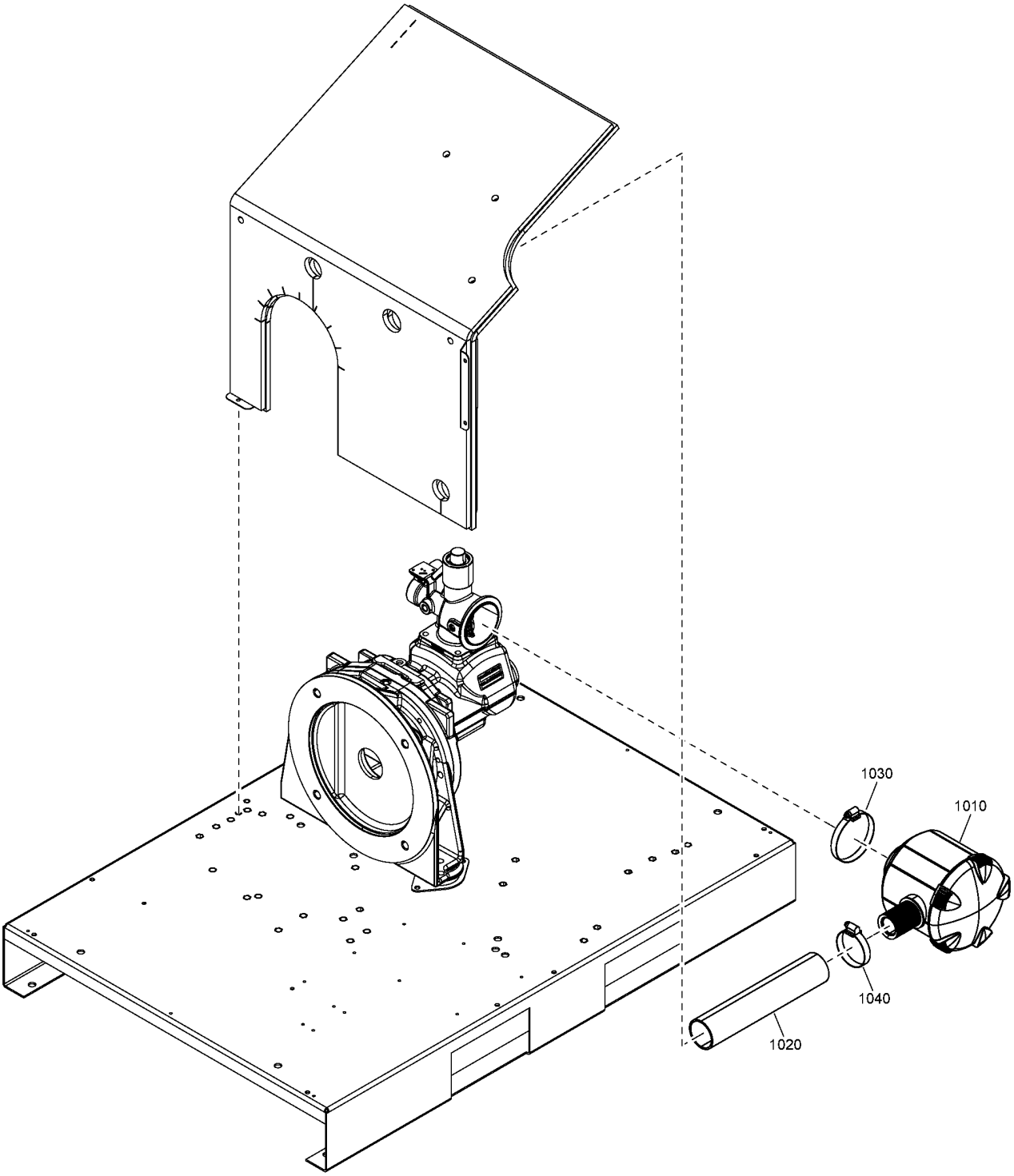

Ref	Part Number	Qty	Name	Validity
1010	6211 4721 00	1	AIR FILTER ASSEMBLY	**(21/08/2018 - 21/08/2018)** MODEL:CPBG20_18J , MODEL:CPBG25_18J , MODEL:CPBG29_18J , MODEL:CPBG34_18J **(22/08/2018 - ...)**
	•	1	AIR FILTER ELEMENT	
	Service kits:		2200 9035 46 - KIT 8000H - 30-35HP - DIRECT DRIVEN - WITH DRYER 2200 9035 45 - KIT 8000H - 30-35HP - DIRECT DRIVEN - WITHOUT DRYER 2200 9035 44 - KIT 8000H - 20-25HP - DIRECT DRIVEN - WITH DRYER 2200 9035 43 - KIT 8000H - 20-25HP - DIRECT DRIVEN - WITHOUT DRYER 2200 9035 42 - KIT 8000H - 30-35HP - GEAR DRIVEN - WITH DRYER 2200 9035 41 - KIT 8000H - 30-35HP - GEAR DRIVEN - WITHOUT DRYER 2200 9035 40 - KIT 8000H - 20-25HP - GEAR DRIVEN - WITH DRYER 2200 9035 39 - KIT 8000H - 20-25HP - GEAR DRIVEN - WITHOUT DRYER 2200 9035 09 - KIT 4000H - 30-35HP - DIRECT DRIVEN - WITH DRYER 2200 9035 08 - KIT 4000H - 30-35HP - DIRECT DRIVEN - WITHOUT DRYER 2200 9035 07 - KIT 4000H - 20-25HP - DIRECT DRIVEN - WITH DRYER 2200 9035 06 - KIT 4000H - 20-25HP - DIRECT DRIVEN - WITHOUT DRYER 2200 9035 05 - KIT 4000H - 30-35HP - GEAR DRIVEN - WITH DRYER 2200 9035 04 - KIT 4000H - 30-35HP - GEAR DRIVEN - WITHOUT DRYER 2200 9035 03 - KIT 4000H - 20-25HP - GEAR DRIVEN - WITH DRYER 2200 9035 02 - KIT 4000H - 20-25HP - GEAR DRIVEN - WITHOUT DRYER 2200 9035 01 - KIT 2000H - WITH DRYER 2200 9035 00 - KIT 2000H - WITHOUT DRYER	
1020	2204 1230 00	AR	HOSE	**(21/08/2018 - 21/08/2018)** MODEL:CPBG20_18J , MODEL:CPBG25_18J , MODEL:CPBG29_18J , MODEL:CPBG34_18J **(22/08/2018 - ...)**
1030	~~0347 6100 16~~	1	HOSE CLAMP	**(21/08/2018 - 21/08/2018)** MODEL:CPBG20_18J , MODEL:CPBG25_18J , MODEL:CPBG29_18J , MODEL:CPBG34_18J **(22/08/2018 - ...)**
	Substituted by:		0347 6100 04 - HOSE CLIP+SCREW (quantity: 1)	
1040	0347 6113 00	1	HOSE CLAMP	**(21/08/2018 - 21/08/2018)** MODEL:CPBG20_18J , MODEL:CPBG25_18J , MODEL:CPBG29_18J , MODEL:CPBG34_18J **(22/08/2018 - ...)**

Legend:

MODEL:CPBG20_18J - Model:CPBg 20
MODEL:CPBG25_18J - Model:CPBg 25
MODEL:CPBG29_18J - Model:CPBg 29
MODEL:CPBG34_18J - Model:CPBg 34

8.2 - Air inlet

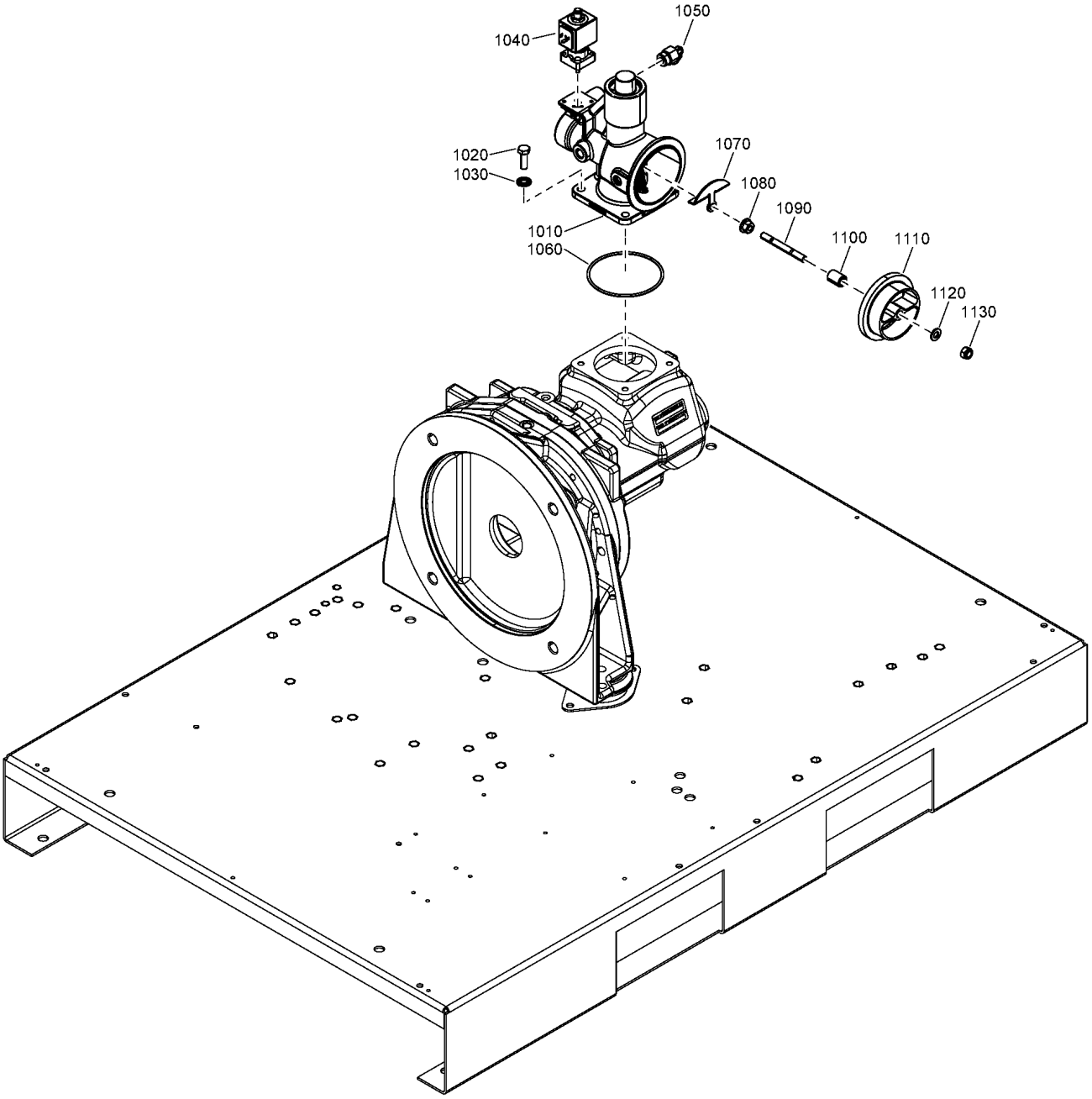
1050
1040
1020
1030
1070
1080
1090
1010
1060
1100
1110
1120
1130

Ref	Part Number	Qty	Name	Validity
1010		1	REGULATION VALVE	(21/08/2018 - ...)
1020	0147 1325 03	4	HEXAGON HEAD SCREW	(21/08/2018 - ...)
1030	2202 9045 01	4	WASHER	(21/08/2018 - ...)
1040	2202 7298 01	1	SOLENOID VALVE	(21/08/2018 - ...)
1050	0583 8120 65	1	COUPLING	(21/08/2018 - ...)
1060	0663 2106 15	1	O-RING	(21/08/2018 - ...)
1070		1	PLATE	(21/08/2018 - ...)
	Service kits:	2200 9035 46 - KIT 8000H - 30-35HP - DIRECT DRIVEN - WITH DRYER 2200 9035 45 - KIT 8000H - 30-35HP - DIRECT DRIVEN - WITHOUT DRYER 2200 9035 44 - KIT 8000H - 20-25HP - DIRECT DRIVEN - WITH DRYER 2200 9035 43 - KIT 8000H - 20-25HP - DIRECT DRIVEN - WITHOUT DRYER 2200 9035 42 - KIT 8000H - 30-35HP - GEAR DRIVEN - WITH DRYER 2200 9035 41 - KIT 8000H - 30-35HP - GEAR DRIVEN - WITHOUT DRYER 2200 9035 40 - KIT 8000H - 20-25HP - GEAR DRIVEN - WITH DRYER 2200 9035 39 - KIT 8000H - 20-25HP - GEAR DRIVEN - WITHOUT DRYER 2901 0002 01 - UNLOADER VALVE KIT	
1080	0291 1185 30	1	NUT	(21/08/2018 - ...)
1090	0246 1956 39	1	STUD	(21/08/2018 - ...)
1100	6214 3353 00	1	SPACER	(21/08/2018 - ...)
1110	1613 8722 81	1	CONNECTOR ASSEMBLY	(21/08/2018 - ...)
1120	0301 2335 00	1	PLAIN WASHER	(21/08/2018 - ...)
1130		1	LOCK NUT	(21/08/2018 - ...)
	Service kits:	2200 9035 46 - KIT 8000H - 30-35HP - DIRECT DRIVEN - WITH DRYER 2200 9035 45 - KIT 8000H - 30-35HP - DIRECT DRIVEN - WITHOUT DRYER 2200 9035 44 - KIT 8000H - 20-25HP - DIRECT DRIVEN - WITH DRYER 2200 9035 43 - KIT 8000H - 20-25HP - DIRECT DRIVEN - WITHOUT DRYER 2200 9035 42 - KIT 8000H - 30-35HP - GEAR DRIVEN - WITH DRYER 2200 9035 41 - KIT 8000H - 30-35HP - GEAR DRIVEN - WITHOUT DRYER 2200 9035 40 - KIT 8000H - 20-25HP - GEAR DRIVEN - WITH DRYER 2200 9035 39 - KIT 8000H - 20-25HP - GEAR DRIVEN - WITHOUT DRYER 2901 0002 01 - UNLOADER VALVE KIT	

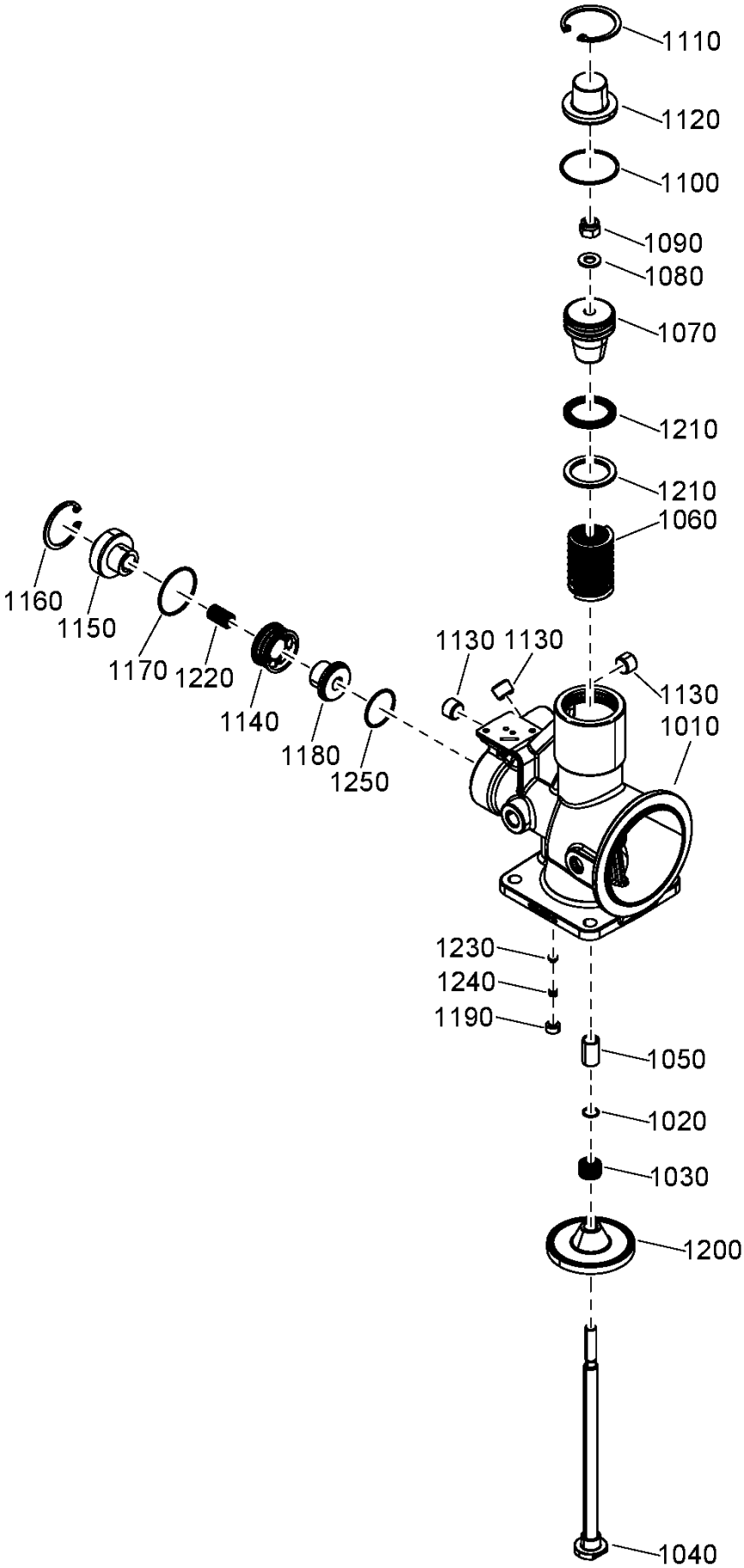
1110
1120
1100
1090
1080
1070
1210
1210
1060
1160
1150
1170
1220
1140
1180
1250
1130
1130
1130
1010
1230
1240
1190
1050
1020
1030
1200
1040

Ref	Part Number	Qty	Name	Validity
	1622 8786 88	1	REGULATION VALVE	
1010		1	HOUSING VALVE	(21/08/2018 - ...)
1020		1	O-RING	(21/08/2018 - ...)
	Service kits:	2200 9035 39 - KIT 8000H - 20-25HP - GEAR DRIVEN - WITHOUT DRYER 2200 9035 40 - KIT 8000H - 20-25HP - GEAR DRIVEN - WITH DRYER 2200 9035 41 - KIT 8000H - 30-35HP - GEAR DRIVEN - WITHOUT DRYER 2200 9035 42 - KIT 8000H - 30-35HP - GEAR DRIVEN - WITH DRYER 2200 9035 43 - KIT 8000H - 20-25HP - DIRECT DRIVEN - WITHOUT DRYER 2200 9035 44 - KIT 8000H - 20-25HP - DIRECT DRIVEN - WITH DRYER 2200 9035 45 - KIT 8000H - 30-35HP - DIRECT DRIVEN - WITHOUT DRYER 2200 9035 46 - KIT 8000H - 30-35HP - DIRECT DRIVEN - WITH DRYER 2901 0002 01 - UNLOADER VALVE KIT	
1030	1613 6802 01	1	SPRING	(21/08/2018 - ...)
1040	1613 7032 03	1	PISTON ROD	(21/08/2018 - ...)
1050	0500 4510 29	1	PLAIN BEARING	(21/08/2018 - ...)
1060	1613 6800 01	1	SPRING	(21/08/2018 - ...)
1070	1613 7031 01	1	PISTON	(21/08/2018 - ...)
1080	0301 2135 01	1	WASHER	(21/08/2018 - ...)
1090	5541 5510 00	1	LOCK NUT	(21/08/2018 - ...)
1100		1	O-RING	(21/08/2018 - ...)
	Service kits:	2200 9035 39 - KIT 8000H - 20-25HP - GEAR DRIVEN - WITHOUT DRYER 2200 9035 40 - KIT 8000H - 20-25HP - GEAR DRIVEN - WITH DRYER 2200 9035 41 - KIT 8000H - 30-35HP - GEAR DRIVEN - WITHOUT DRYER 2200 9035 42 - KIT 8000H - 30-35HP - GEAR DRIVEN - WITH DRYER 2200 9035 43 - KIT 8000H - 20-25HP - DIRECT DRIVEN - WITHOUT DRYER 2200 9035 44 - KIT 8000H - 20-25HP - DIRECT DRIVEN - WITH DRYER 2200 9035 45 - KIT 8000H - 30-35HP - DIRECT DRIVEN - WITHOUT DRYER 2200 9035 46 - KIT 8000H - 30-35HP - DIRECT DRIVEN - WITH DRYER 2901 0002 01 - UNLOADER VALVE KIT	
1110		1	CIRCLIP	(21/08/2018 - ...)
	Service kits:	2200 9035 39 - KIT 8000H - 20-25HP - GEAR DRIVEN - WITHOUT DRYER 2200 9035 40 - KIT 8000H - 20-25HP - GEAR DRIVEN - WITH DRYER 2200 9035 41 - KIT 8000H - 30-35HP - GEAR DRIVEN - WITHOUT DRYER 2200 9035 42 - KIT 8000H - 30-35HP - GEAR DRIVEN - WITH DRYER 2200 9035 43 - KIT 8000H - 20-25HP - DIRECT DRIVEN - WITHOUT DRYER 2200 9035 44 - KIT 8000H - 20-25HP - DIRECT DRIVEN - WITH DRYER 2200 9035 45 - KIT 8000H - 30-35HP - DIRECT DRIVEN - WITHOUT DRYER 2200 9035 46 - KIT 8000H - 30-35HP - DIRECT DRIVEN - WITH DRYER 2901 0002 01 - UNLOADER VALVE KIT	
1120	1613 6966 00	1	COVER	(21/08/2018 - ...)
1130	0686 3101 18	3	PLUG	(21/08/2018 - ...)
1140	1613 6783 23	1	PISTON	(21/08/2018 - ...)
1150	1613 6794 00	1	COVER	(21/08/2018 - ...)
1160		1	CIRCLIPS	(21/08/2018 - ...)
	Service kits:	2200 9035 39 - KIT 8000H - 20-25HP - GEAR DRIVEN - WITHOUT DRYER 2200 9035 40 - KIT 8000H - 20-25HP - GEAR DRIVEN - WITH DRYER 2200 9035 41 - KIT 8000H - 30-35HP - GEAR DRIVEN - WITHOUT DRYER 2200 9035 42 - KIT 8000H - 30-35HP - GEAR DRIVEN - WITH DRYER 2200 9035 43 - KIT 8000H - 20-25HP - DIRECT DRIVEN - WITHOUT DRYER 2200 9035 44 - KIT 8000H - 20-25HP - DIRECT DRIVEN - WITH DRYER 2200 9035 45 - KIT 8000H - 30-35HP - DIRECT DRIVEN - WITHOUT DRYER 2200 9035 46 - KIT 8000H - 30-35HP - DIRECT DRIVEN - WITH DRYER 2901 0002 01 - UNLOADER VALVE KIT	
1170		1	O-RING	(21/08/2018 - ...)
	Service kits:	2200 9035 39 - KIT 8000H - 20-25HP - GEAR DRIVEN - WITHOUT DRYER 2200 9035 40 - KIT 8000H - 20-25HP - GEAR DRIVEN - WITH DRYER 2200 9035 41 - KIT 8000H - 30-35HP - GEAR DRIVEN - WITHOUT DRYER 2200 9035 42 - KIT 8000H - 30-35HP - GEAR DRIVEN - WITH DRYER 2200 9035 43 - KIT 8000H - 20-25HP - DIRECT DRIVEN - WITHOUT DRYER 2200 9035 44 - KIT 8000H - 20-25HP - DIRECT DRIVEN - WITH DRYER 2200 9035 45 - KIT 8000H - 30-35HP - DIRECT DRIVEN - WITHOUT DRYER 2200 9035 46 - KIT 8000H - 30-35HP - DIRECT DRIVEN - WITH DRYER 2901 0002 01 - UNLOADER VALVE KIT	
1180	1613 6796 03	1	SEAT	(21/08/2018 - ...)
1190	1622 5127 10	1	NON RETURN VALVE	(21/08/2018 - ...)
1200	1613 7699 02	1	VALVE	(21/08/2018 - ...)
1210		2	PISTON RING	(21/08/2018 - ...)

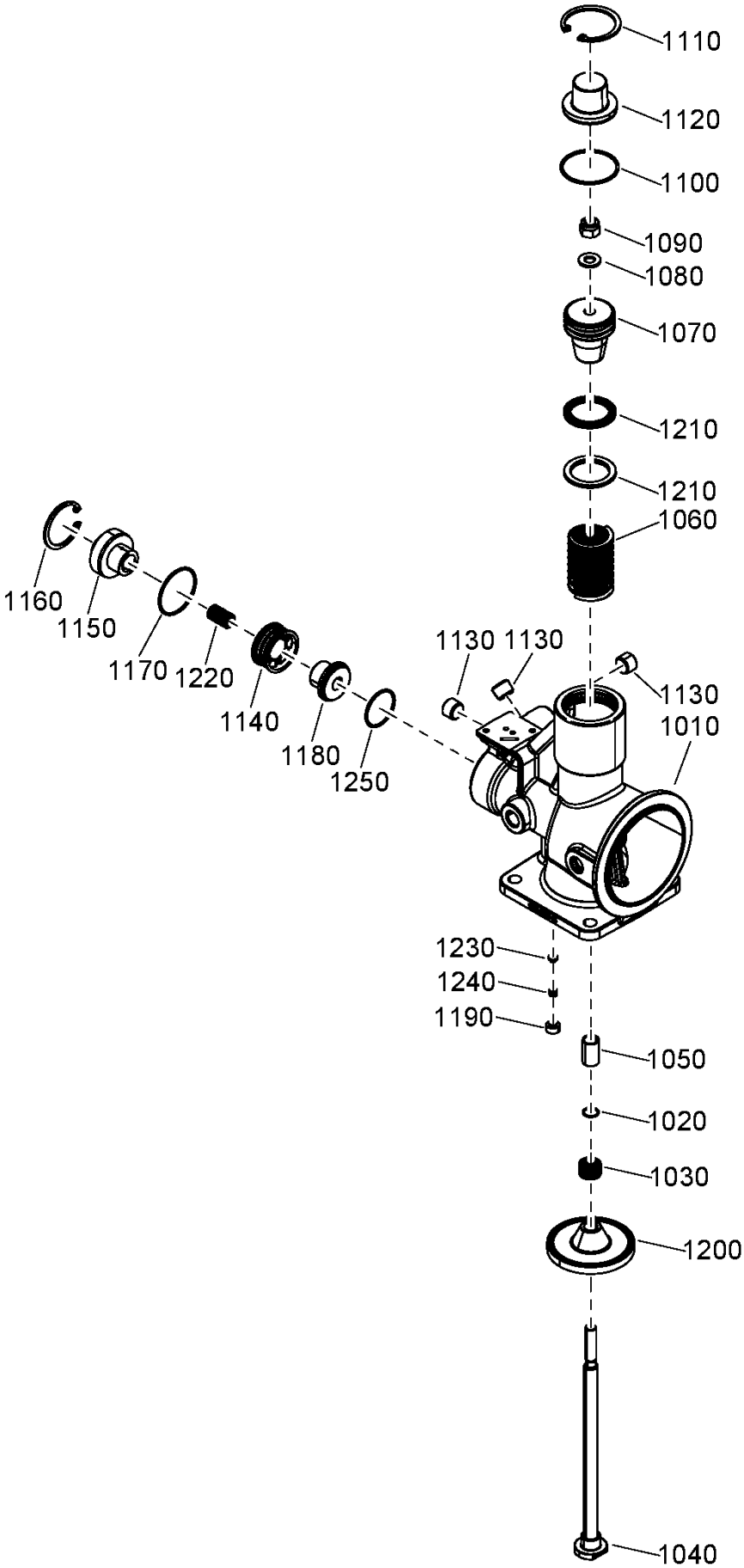
1110
1120
1100
1090
1080
1070
1210
1210
1060
1160
1150
1170
1220
1140
1180
1250
1130
1130
1130
1010
1230
1240
1190
1050
1020
1030
1200
1040

Ref	Part Number	Qty	Name	Validity
	Service kits:	2200 9035 39 - KIT 8000H - 20-25HP - GEAR DRIVEN - WITHOUT DRYER 2200 9035 40 - KIT 8000H - 20-25HP - GEAR DRIVEN - WITH DRYER 2200 9035 41 - KIT 8000H - 30-35HP - GEAR DRIVEN - WITHOUT DRYER 2200 9035 42 - KIT 8000H - 30-35HP - GEAR DRIVEN - WITH DRYER 2200 9035 43 - KIT 8000H - 20-25HP - DIRECT DRIVEN - WITHOUT DRYER 2200 9035 44 - KIT 8000H - 20-25HP - DIRECT DRIVEN - WITH DRYER 2200 9035 45 - KIT 8000H - 30-35HP - DIRECT DRIVEN - WITHOUT DRYER 2200 9035 46 - KIT 8000H - 30-35HP - DIRECT DRIVEN - WITH DRYER 2901 0002 01 - UNLOADER VALVE KIT	
1220	1622 5122 02	1	SPRING	**(21/08/2018 - ...)**
1230	1604 0389 00	1	VALVE	**(21/08/2018 - ...)**
1240	1622 5144 00	1	SPRING	**(21/08/2018 - ...)**
1250	0663 7129 00	1	O-RING	**(21/08/2018 - ...)**

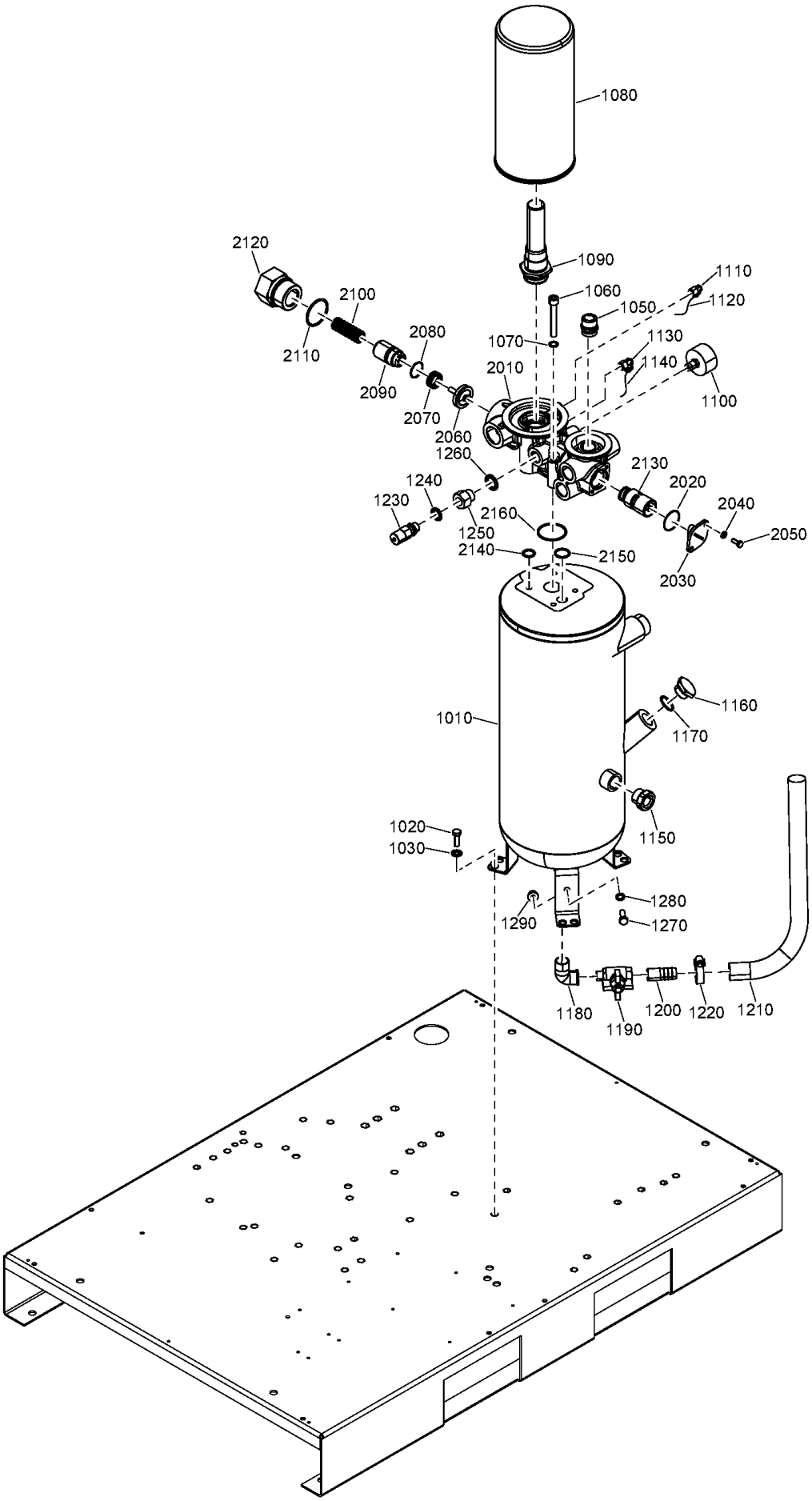
1080
1090
1060
1050
1110
1120
1130
1140
1100
1070
2010
2120
2100
2110
2080
2090
2070
2060
1260
2130
2020
2040
2050
2030
1240
1230
2160
1250
2140
2150
1010
1160
1170
1150
1020
1030
1280
1290
1270
1180
1190
1200
1220
1210

Ref	Part Number	Qty	Name	Validity
1010	2204 1445 01	1	VESSEL	**(21/08/2018 - 21/08/2018)** (MODEL:CPBG20_18J , MODEL:CPBG25_18J , MODEL:CPBG29_18J , MODEL:CPBG34_18J) + MAPPR:CE **(22/08/2018 - ...)** MAPPR:CE
1010	2204 1445 02	1	VESSEL	**(21/08/2018 - 21/08/2018)** (MODEL:CPBG20_18J , MODEL:CPBG25_18J , MODEL:CPBG29_18J , MODEL:CPBG34_18J) + MAPPR:MOM **(22/08/2018 - ...)** MAPPR:MOM
1010	2204 1445 05	1	VESSEL	**(21/08/2018 - 21/08/2018)** (MODEL:CPBG20_18J , MODEL:CPBG25_18J , MODEL:CPBG29_18J , MODEL:CPBG34_18J) + MAPPR:AS1210 **(22/08/2018 - ...)** MAPPR:AS1210
1010	2204 1445 03	1	VESSEL	**(21/08/2018 - 21/08/2018)** (MAPPR:ASME , MAPPR:CRNASME , MAPPR:SA) + (MODEL:CPBG20_18J , MODEL:CPBG25_18J , MODEL:CPBG29_18J , MODEL:CPBG34_18J) **(22/08/2018 - ...)** MAPPR:ASME , MAPPR:CRNASME , MAPPR:SA
1020	0147 1325 03	3	HEXAGON HEAD SCREW	**(21/08/2018 - 21/08/2018)** MODEL:CPBG20_18J , MODEL:CPBG25_18J , MODEL:CPBG29_18J , MODEL:CPBG34_18J **(22/08/2018 - ...)**
1030	2202 9045 01	3	WASHER	**(21/08/2018 - 21/08/2018)** MODEL:CPBG20_18J , MODEL:CPBG25_18J , MODEL:CPBG29_18J , MODEL:CPBG34_18J **(22/08/2018 - ...)**
1050	2204 1809 00	1	NIPPLE	**(21/08/2018 - 21/08/2018)** MODEL:CPBG20_18J , MODEL:CPBG25_18J , MODEL:CPBG29_18J , MODEL:CPBG34_18J **(22/08/2018 - ...)**
1060	0211 1371 03	4	SCREW	**(21/08/2018 - 21/08/2018)** MODEL:CPBG20_18J , MODEL:CPBG25_18J , MODEL:CPBG29_18J , MODEL:CPBG34_18J **(22/08/2018 - ...)**
1070	0333 3100 31	2	WASHER	**(21/08/2018 - 21/08/2018)** MODEL:CPBG20_18J , MODEL:CPBG25_18J , MODEL:CPBG29_18J , MODEL:CPBG34_18J **(22/08/2018 - ...)**
1080		1	OIL SEPARATOR	**(22/08/2018 - ...)** MODEL:CPBG20_18J , MODEL:CPBG25_18J , MODEL:CPVD21_18J , MODEL:CPVD25_18J
	Service kits:	2200 9035 44 - KIT 8000H - 20-25HP - DIRECT DRIVEN - WITH DRYER 2200 9035 43 - KIT 8000H - 20-25HP - DIRECT DRIVEN - WITHOUT DRYER 2200 9035 40 - KIT 8000H - 20-25HP - GEAR DRIVEN - WITH DRYER 2200 9035 39 - KIT 8000H - 20-25HP - GEAR DRIVEN - WITHOUT DRYER 2200 9035 07 - KIT 4000H - 20-25HP - DIRECT DRIVEN - WITH DRYER 2200 9035 06 - KIT 4000H - 20-25HP - DIRECT DRIVEN - WITHOUT DRYER 2200 9035 03 - KIT 4000H - 20-25HP - GEAR DRIVEN - WITH DRYER 2200 9035 02 - KIT 4000H - 20-25HP - GEAR DRIVEN - WITHOUT DRYER	
1080		1	OIL SEPARATOR	**(22/08/2018 - ...)** MODEL:CPBG29_18J , MODEL:CPBG34_18J , MODEL:CPVD29_18J , MODEL:CPVD34_18J
	Service kits:	2200 9035 46 - KIT 8000H - 30-35HP - DIRECT DRIVEN - WITH DRYER 2200 9035 45 - KIT 8000H - 30-35HP - DIRECT DRIVEN - WITHOUT DRYER 2200 9035 42 - KIT 8000H - 30-35HP - GEAR DRIVEN - WITH DRYER 2200 9035 41 - KIT 8000H - 30-35HP - GEAR DRIVEN - WITHOUT DRYER 2200 9035 09 - KIT 4000H - 30-35HP - DIRECT DRIVEN - WITH DRYER 2200 9035 08 - KIT 4000H - 30-35HP - DIRECT DRIVEN - WITHOUT DRYER 2200 9035 05 - KIT 4000H - 30-35HP - GEAR DRIVEN - WITH DRYER 2200 9035 04 - KIT 4000H - 30-35HP - GEAR DRIVEN - WITHOUT DRYER	
1090	2204 1807 82	1	NIPPLE	**(29/01/2019 - ...)** MODEL:CPBG20_18J , MODEL:CPBG25_18J , MODEL:CPVD21_18J , MODEL:CPVD25_18J
1090	2204 1808 80	1	NIPPLE	**(21/08/2018 - 21/08/2018)** MODEL:CPBG29_18J , MODEL:CPBG34_18J **(22/08/2018 - ...)** MODEL:CPBG29_18J , MODEL:CPBG34_18J , MODEL:CPVD29_18J , MODEL:CPVD34_18J
1100	2200 6001 03	1	PRESSURE GAUGE	**(05/12/2018 - ...)**
1110	9740 2004 32	1	ELBOW COUPLING	**(21/08/2018 - 21/08/2018)** MODEL:CPBG20_18J , MODEL:CPBG25_18J , MODEL:CPBG29_18J , MODEL:CPBG34_18J **(22/08/2018 - ...)**
1120	0070 6002 48	AR	HOSE	**(21/08/2018 - 21/08/2018)** MODEL:CPBG20_18J , MODEL:CPBG25_18J , MODEL:CPBG29_18J , MODEL:CPBG34_18J **(22/08/2018 - ...)**
1130	2202 7639 01	1	COUPLING	**(21/08/2018 - 21/08/2018)** MODEL:CPBG20_18J , MODEL:CPBG25_18J , MODEL:CPBG29_18J , MODEL:CPBG34_18J **(22/08/2018 - ...)**
1140	0070 6002 09	AR	HOSE	**(21/08/2018 - 21/08/2018)** MODEL:CPBG20_18J , MODEL:CPBG25_18J , MODEL:CPBG29_18J , MODEL:CPBG34_18J **(22/08/2018 - ...)**

Legend:

MAPPR:AS1210 - Pressure Vessel Approval:AS1210
MAPPR:CRNASME - Pressure Vessel Approval:CRN (based on ASME)
MODEL:CPBG20_18J - Model:CPBg 20
MODEL:CPBG34_18J - Model:CPBg 34
MODEL:CPVD29_18J - Model:CPVSd 29
MAPPR:ASME - Pressure Vessel Approval:ASME (U Stamp)
MAPPR:MOM - Pressure Vessel Approval:MOM
MODEL:CPBG25_18J - Model:CPBg 25
MODEL:CPVD21_18J - Model:CPVSd 21
MODEL:CPVD34_18J - Model:CPVSd 34
MAPPR:CE - Pressure Vessel Approval:CE
MAPPR:SA - Pressure Vessel Approval:SA
MODEL:CPBG29_18J - Model:CPBg 29
MODEL:CPVD25_18J - Model:CPVSd 25

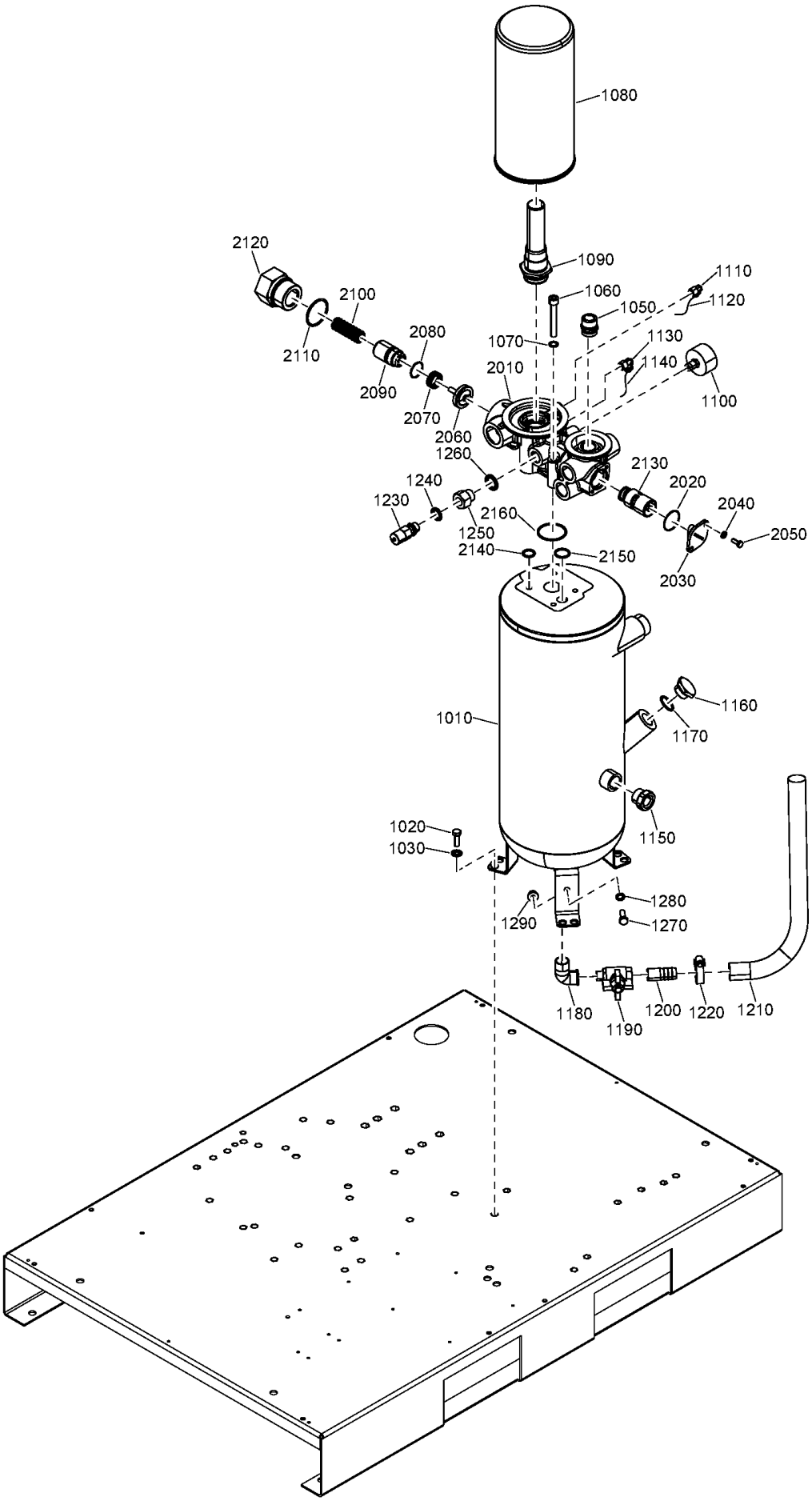
1080
1090
1060
1050
1110
1120
1130
1140
1100
1070
2010
2120
2100
2110
2080
2090
2070
2060
1260
2130
2020
2040
2050
2030
1240
1230
2160
1250
2140
2150
1010
1160
1170
1150
1020
1030
1280
1290
1270
1180
1190
1200
1220
1210

Ref	Part Number	Qty	Name	Validity
1150	2200 7599 10	1	PLUG LEVEL SIGHT	**(21/08/2018 - 21/08/2018)** MODEL:CPBG20_18J , MODEL:CPBG25_18J , MODEL:CPBG29_18J , MODEL:CPBG34_18J **(22/08/2018 - ...)**
1160	2202 2124 21	1	PLUG	**(21/08/2018 - 21/08/2018)** MODEL:CPBG20_18J , MODEL:CPBG25_18J , MODEL:CPBG29_18J , MODEL:CPBG34_18J **(22/08/2018 - ...)**
1170	0663 2105 90	1	O-RING	**(21/08/2018 - 21/08/2018)** MODEL:CPBG20_18J , MODEL:CPBG25_18J , MODEL:CPBG29_18J , MODEL:CPBG34_18J **(22/08/2018 - ...)**
1180	0560 1305 03	1	ELBOW	**(21/08/2018 - 21/08/2018)** MODEL:CPBG20_18J , MODEL:CPBG25_18J , MODEL:CPBG29_18J , MODEL:CPBG34_18J **(22/08/2018 - ...)**
1190	2200 7601 07	1	BALL VALVE	**(21/08/2018 - 21/08/2018)** MODEL:CPBG20_18J , MODEL:CPBG25_18J , MODEL:CPBG29_18J , MODEL:CPBG34_18J **(22/08/2018 - ...)**
1200	2200 7513 22	1	DRAIN PIPE COUPLING	**(21/08/2018 - 21/08/2018)** MODEL:CPBG20_18J , MODEL:CPBG25_18J , MODEL:CPBG29_18J , MODEL:CPBG34_18J **(22/08/2018 - ...)**
1210	~~2200 6503 40~~	AR	DISCHARGE HOSE	**(21/08/2018 - 21/08/2018)** MODEL:CPBG20_18J , MODEL:CPBG25_18J , MODEL:CPBG29_18J , MODEL:CPBG34_18J **(22/08/2018 - ...)**
	Substituted by:	6214 3285 00 - TUYAU INDUSTRESS NT D 10X16 (quantity: 1)		
1220	0347 6109 00	2	CABLE TIE	**(21/08/2018 - 21/08/2018)** MODEL:CPBG20_18J , MODEL:CPBG25_18J , MODEL:CPBG29_18J , MODEL:CPBG34_18J **(22/08/2018 - ...)**
1230	0830 1010 20	1	SAFETY VALVE	**(21/08/2018 - 21/08/2018)** (MAPPR:ASME , MAPPR:CRNASME) + (MODEL:CPBG20_18J , MODEL:CPBG25_18J , MODEL:CPBG29_18J , MODEL:CPBG34_18J) **(22/08/2018 - ...)** MAPPR:ASME , MAPPR:CRNASME
1230	2202 8891 07	1	SAFETY VALVE	**(21/08/2018 - 21/08/2018)** (MAPPR:AS1210 , MAPPR:CE , MAPPR:MOM , MAPPR:SA) + (MODEL:CPBG20_18J , MODEL:CPBG25_18J , MODEL:CPBG29_18J , MODEL:CPBG34_18J) **(22/08/2018 - ...)** MAPPR:AS1210 , MAPPR:CE , MAPPR:MOM , MAPPR:SA
1240	0661 1000 39	1	SEAL WASHER	**(21/08/2018 - 21/08/2018)** (MAPPR:AS1210 , MAPPR:CE , MAPPR:MOM , MAPPR:SA) + (MODEL:CPBG20_18J , MODEL:CPBG25_18J , MODEL:CPBG29_18J , MODEL:CPBG34_18J) **(22/08/2018 - ...)** MAPPR:AS1210 , MAPPR:CE , MAPPR:MOM , MAPPR:SA
1250	2203 0351 00	1	REDUCTION	**(21/08/2018 - 21/08/2018)** (MAPPR:AS1210 , MAPPR:CE , MAPPR:MOM , MAPPR:SA) + (MODEL:CPBG20_18J , MODEL:CPBG25_18J , MODEL:CPBG29_18J , MODEL:CPBG34_18J) **(22/08/2018 - ...)** MAPPR:AS1210 , MAPPR:CE , MAPPR:MOM , MAPPR:SA
1260	0661 1000 40	1	SEAL WASHER	**(21/08/2018 - 21/08/2018)** (MAPPR:AS1210 , MAPPR:CE , MAPPR:MOM , MAPPR:SA) + (MODEL:CPBG20_18J , MODEL:CPBG25_18J , MODEL:CPBG29_18J , MODEL:CPBG34_18J) **(22/08/2018 - ...)** MAPPR:AS1210 , MAPPR:CE , MAPPR:MOM , MAPPR:SA
1270	0147 1325 03	2	HEXAGON HEAD SCREW	**(21/08/2018 - 21/08/2018)** MODEL:CPBG20_18J , MODEL:CPBG25_18J , MODEL:CPBG29_18J , MODEL:CPBG34_18J **(22/08/2018 - ...)**
1280	0333 3100 17	1	WASHER	**(21/08/2018 - 21/08/2018)** MODEL:CPBG20_18J , MODEL:CPBG25_18J , MODEL:CPBG29_18J , MODEL:CPBG34_18J **(22/08/2018 - ...)**
1290	0291 1185 30	2	NUT	**(21/08/2018 - 21/08/2018)** MODEL:CPBG20_18J , MODEL:CPBG25_18J , MODEL:CPBG29_18J , MODEL:CPBG34_18J **(22/08/2018 - ...)**
2010	1625 4735 00	1	INSTRUMENT BLOCK	**(21/08/2018 - 21/08/2018)** MODEL:CPBG20_18J , MODEL:CPBG25_18J , MODEL:CPBG29_18J , MODEL:CPBG34_18J **(22/08/2018 - 30/12/2040)**
2020		1	O-RING	**(21/08/2018 - 21/08/2018)** MODEL:CPBG20_18J , MODEL:CPBG25_18J , MODEL:CPBG29_18J , MODEL:CPBG34_18J **(22/08/2018 - 30/12/2040)**

Legend:

MAPPR:AS1210 - Pressure Vessel Approval:AS1210
MAPPR:CRNASME - Pressure Vessel Approval:CRN (based on ASME)
MODEL:CPBG20_18J - Model:CPBg 20
MODEL:CPBG34_18J - Model:CPBg 34
MODEL:CPVD29_18J - Model:CPVSd 29
MAPPR:ASME - Pressure Vessel Approval:ASME (U Stamp)
MAPPR:MOM - Pressure Vessel Approval:MOM
MODEL:CPBG25_18J - Model:CPBg 25
MODEL:CPVD21_18J - Model:CPVSd 21
MODEL:CPVD34_18J - Model:CPVSd 34
MAPPR:CE - Pressure Vessel Approval:CE
MAPPR:SA - Pressure Vessel Approval:SA
MODEL:CPBG29_18J - Model:CPBg 29
MODEL:CPVD25_18J - Model:CPVSd 25

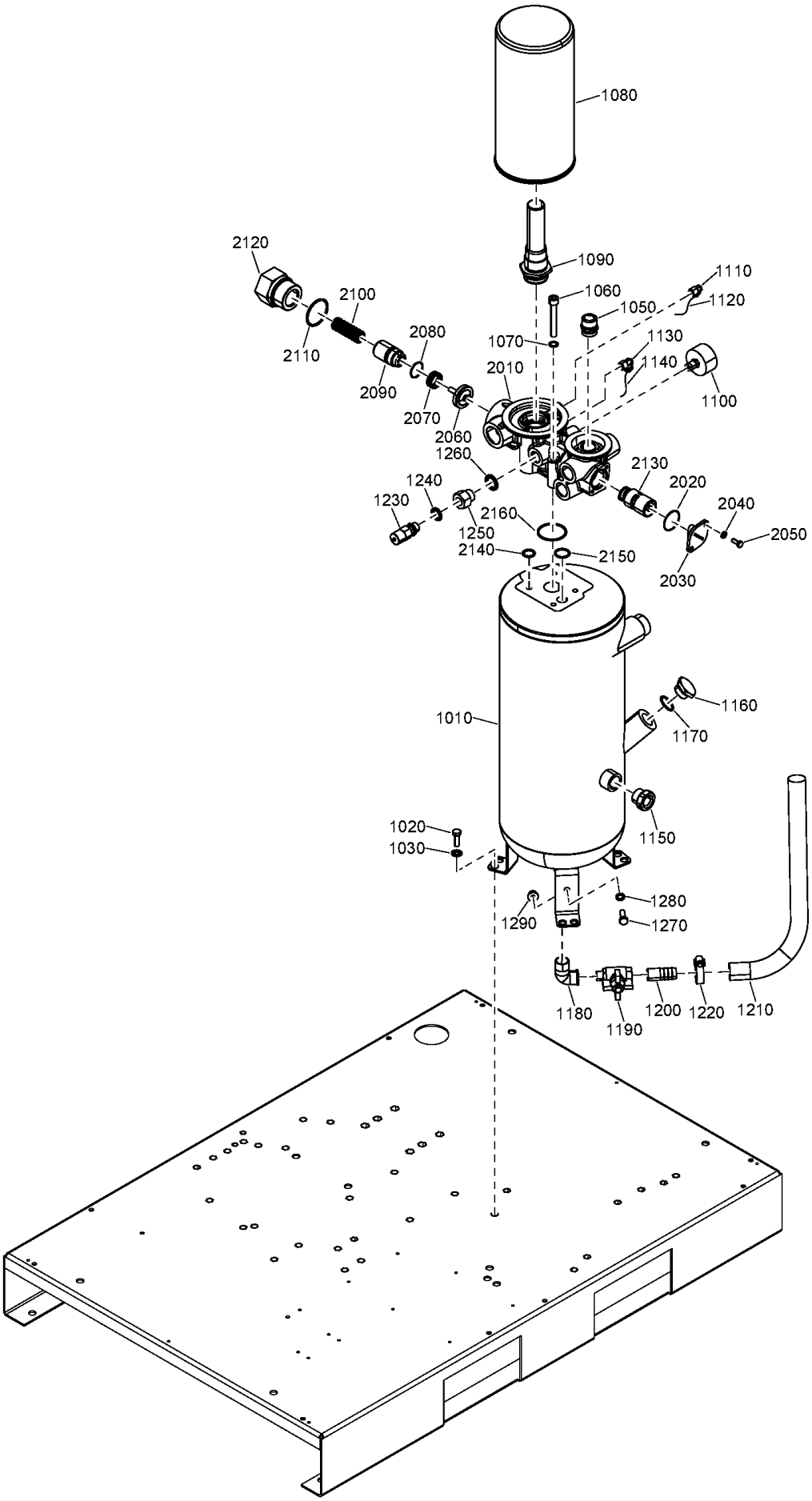
1080
1090
1060
1050
1110
1120
1130
1140
1100
1070
2010
2120
2100
2110
2080
2090
2070
2060
1260
1240
1230
1250
2160
2140
2150
2130
2020
2040
2050
2030
1010
1160
1170
1150
1020
1030
1280
1290
1270
1180
1190
1200
1220
1210

Ref	Part Number	Qty	Name	Validity
	Service kits:	2200 9035 44 - KIT 8000H - 20-25HP - DIRECT DRIVEN - WITH DRYER 2200 9035 43 - KIT 8000H - 20-25HP - DIRECT DRIVEN - WITHOUT DRYER 2200 9035 40 - KIT 8000H - 20-25HP - GEAR DRIVEN - WITH DRYER 2200 9035 39 - KIT 8000H - 20-25HP - GEAR DRIVEN - WITHOUT DRYER 2200 9035 46 - KIT 8000H - 30-35HP - DIRECT DRIVEN - WITH DRYER 2200 9035 45 - KIT 8000H - 30-35HP - DIRECT DRIVEN - WITHOUT DRYER 2200 9035 42 - KIT 8000H - 30-35HP - GEAR DRIVEN - WITH DRYER 2200 9035 41 - KIT 8000H - 30-35HP - GEAR DRIVEN - WITHOUT DRYER 2901 3531 00 - THERMOSTATIC VALVE KIT - 8000H	
2030	1614 6118 00	1	COVER	**(21/08/2018 - 21/08/2018)** MODEL:CPBG20_18J , MODEL:CPBG25_18J , MODEL:CPBG29_18J , MODEL:CPBG34_18J **(22/08/2018 - ...)**
2040	0301 2321 00	2	PLAIN WASHER	**(21/08/2018 - 21/08/2018)** MODEL:CPBG20_18J , MODEL:CPBG25_18J , MODEL:CPBG29_18J , MODEL:CPBG34_18J **(22/08/2018 - ...)**
2050	0147 1246 03	2	HEXAGON HEAD SCREW	**(21/08/2018 - 21/08/2018)** MODEL:CPBG20_18J , MODEL:CPBG25_18J , MODEL:CPBG29_18J , MODEL:CPBG34_18J **(22/08/2018 - ...)**
2060		1	ASSEMBLY VALVE	**(21/08/2018 - 21/08/2018)** MODEL:CPBG20_18J , MODEL:CPBG25_18J , MODEL:CPBG29_18J , MODEL:CPBG34_18J **(22/08/2018 - ...)**
	Service kits:	2200 9035 44 - KIT 8000H - 20-25HP - DIRECT DRIVEN - WITH DRYER 2200 9035 43 - KIT 8000H - 20-25HP - DIRECT DRIVEN - WITHOUT DRYER 2200 9035 40 - KIT 8000H - 20-25HP - GEAR DRIVEN - WITH DRYER 2200 9035 39 - KIT 8000H - 20-25HP - GEAR DRIVEN - WITHOUT DRYER 2200 9035 46 - KIT 8000H - 30-35HP - DIRECT DRIVEN - WITH DRYER 2200 9035 45 - KIT 8000H - 30-35HP - DIRECT DRIVEN - WITHOUT DRYER 2200 9035 42 - KIT 8000H - 30-35HP - GEAR DRIVEN - WITH DRYER 2200 9035 41 - KIT 8000H - 30-35HP - GEAR DRIVEN - WITHOUT DRYER 2901 3531 00 - THERMOSTATIC VALVE KIT - 8000H	
2070		1	SPRING	**(21/08/2018 - 21/08/2018)** MODEL:CPBG20_18J , MODEL:CPBG25_18J , MODEL:CPBG29_18J , MODEL:CPBG34_18J **(22/08/2018 - ...)**
	Service kits:	2200 9035 44 - KIT 8000H - 20-25HP - DIRECT DRIVEN - WITH DRYER 2200 9035 43 - KIT 8000H - 20-25HP - DIRECT DRIVEN - WITHOUT DRYER 2200 9035 40 - KIT 8000H - 20-25HP - GEAR DRIVEN - WITH DRYER 2200 9035 39 - KIT 8000H - 20-25HP - GEAR DRIVEN - WITHOUT DRYER 2200 9035 46 - KIT 8000H - 30-35HP - DIRECT DRIVEN - WITH DRYER 2200 9035 45 - KIT 8000H - 30-35HP - DIRECT DRIVEN - WITHOUT DRYER 2200 9035 42 - KIT 8000H - 30-35HP - GEAR DRIVEN - WITH DRYER 2200 9035 41 - KIT 8000H - 30-35HP - GEAR DRIVEN - WITHOUT DRYER 2901 3531 00 - THERMOSTATIC VALVE KIT - 8000H	
2080		1	O-RING	**(21/08/2018 - 21/08/2018)** MODEL:CPBG20_18J , MODEL:CPBG25_18J , MODEL:CPBG29_18J , MODEL:CPBG34_18J **(22/08/2018 - ...)**
	Service kits:	2200 9035 44 - KIT 8000H - 20-25HP - DIRECT DRIVEN - WITH DRYER 2200 9035 43 - KIT 8000H - 20-25HP - DIRECT DRIVEN - WITHOUT DRYER 2200 9035 40 - KIT 8000H - 20-25HP - GEAR DRIVEN - WITH DRYER 2200 9035 39 - KIT 8000H - 20-25HP - GEAR DRIVEN - WITHOUT DRYER 2200 9035 46 - KIT 8000H - 30-35HP - DIRECT DRIVEN - WITH DRYER 2200 9035 45 - KIT 8000H - 30-35HP - DIRECT DRIVEN - WITHOUT DRYER 2200 9035 42 - KIT 8000H - 30-35HP - GEAR DRIVEN - WITH DRYER 2200 9035 41 - KIT 8000H - 30-35HP - GEAR DRIVEN - WITHOUT DRYER 2901 3531 00 - THERMOSTATIC VALVE KIT - 8000H	
2090		1	PISTON	**(21/08/2018 - 21/08/2018)** MODEL:CPBG20_18J , MODEL:CPBG25_18J , MODEL:CPBG29_18J , MODEL:CPBG34_18J **(22/08/2018 - ...)**
	Service kits:	2200 9035 44 - KIT 8000H - 20-25HP - DIRECT DRIVEN - WITH DRYER 2200 9035 43 - KIT 8000H - 20-25HP - DIRECT DRIVEN - WITHOUT DRYER 2200 9035 40 - KIT 8000H - 20-25HP - GEAR DRIVEN - WITH DRYER 2200 9035 39 - KIT 8000H - 20-25HP - GEAR DRIVEN - WITHOUT DRYER 2200 9035 46 - KIT 8000H - 30-35HP - DIRECT DRIVEN - WITH DRYER 2200 9035 45 - KIT 8000H - 30-35HP - DIRECT DRIVEN - WITHOUT DRYER 2200 9035 42 - KIT 8000H - 30-35HP - GEAR DRIVEN - WITH DRYER 2200 9035 41 - KIT 8000H - 30-35HP - GEAR DRIVEN - WITHOUT DRYER 2901 3531 00 - THERMOSTATIC VALVE KIT - 8000H	
2100		1	SPRING	**(21/08/2018 - 21/08/2018)** MODEL:CPBG20_18J , MODEL:CPBG25_18J , MODEL:CPBG29_18J , MODEL:CPBG34_18J **(22/08/2018 - ...)**

Legend:

MAPPR:AS1210 - Pressure Vessel Approval:AS1210
MAPPR:ASME - Pressure Vessel Approval:ASME (U Stamp)
MAPPR:CE - Pressure Vessel Approval:CE
MAPPR:CRNASME - Pressure Vessel Approval:CRN (based on ASME)
MAPPR:MOM - Pressure Vessel Approval:MOM
MAPPR:SA - Pressure Vessel Approval:SA
MODEL:CPBG20_18J - Model:CPBg 20
MODEL:CPBG25_18J - Model:CPBg 25
MODEL:CPBG29_18J - Model:CPBg 29
MODEL:CPBG34_18J - Model:CPBg 34
MODEL:CPVD21_18J - Model:CPVSd 21
MODEL:CPVD25_18J - Model:CPVSd 25
MODEL:CPVD29_18J - Model:CPVSd 29
MODEL:CPVD34_18J - Model:CPVSd 34

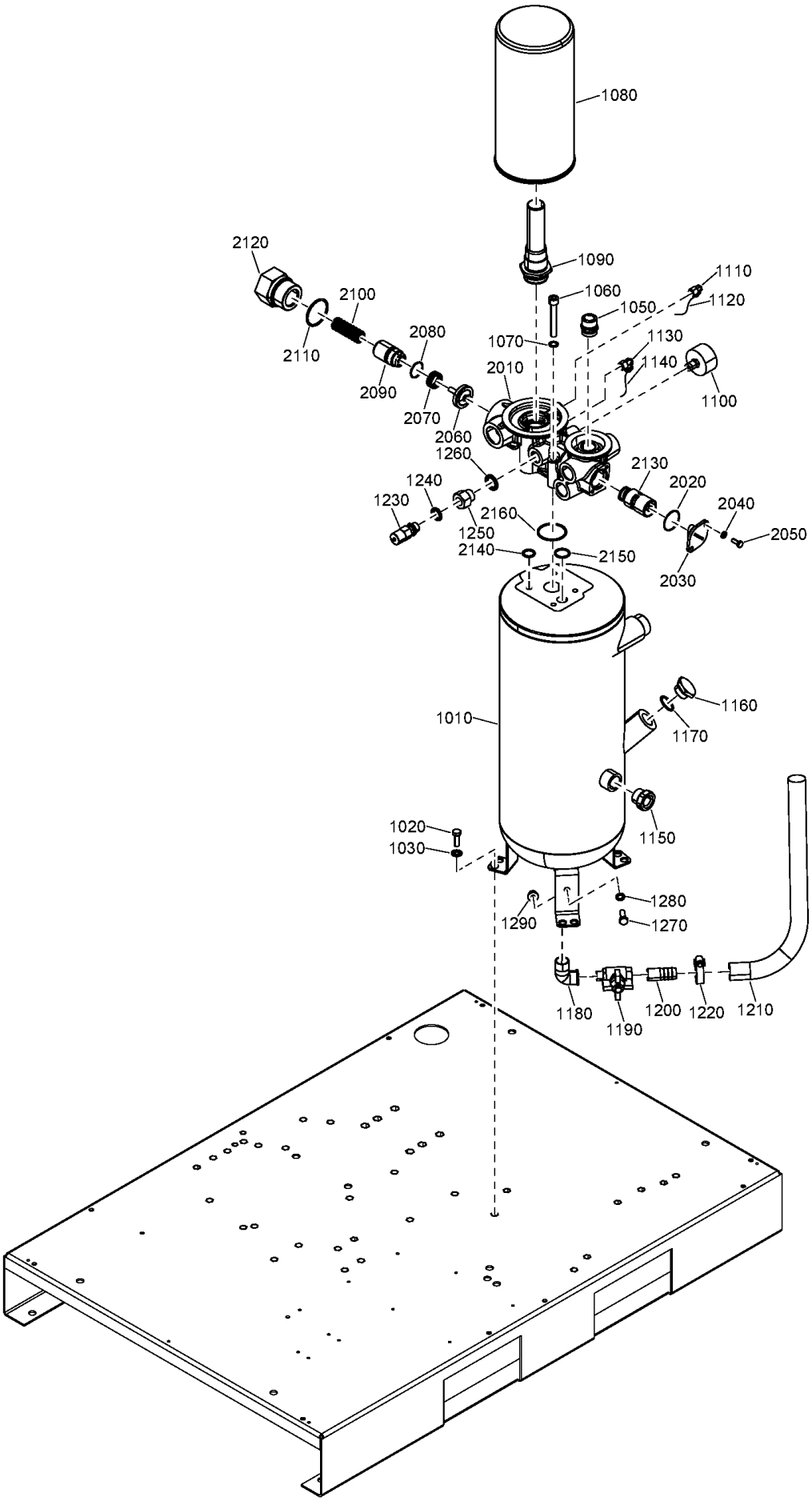
1080
1090
1060
1050
1110
1120
1130
1140
1100
1070
2010
2120
2100
2110
2080
2090
2070
2060
1260
2130
2020
2040
2050
2030
1240
1230
2160
1250
2140
2150
1010
1160
1170
1150
1020
1030
1280
1290
1270
1180
1190
1200
1220
1210

Ref	Part Number	Qty	Name	Validity
	Service kits:	2200 9035 44 - KIT 8000H - 20-25HP - DIRECT DRIVEN - WITH DRYER 2200 9035 43 - KIT 8000H - 20-25HP - DIRECT DRIVEN - WITHOUT DRYER 2200 9035 40 - KIT 8000H - 20-25HP - GEAR DRIVEN - WITH DRYER 2200 9035 39 - KIT 8000H - 20-25HP - GEAR DRIVEN - WITHOUT DRYER 2200 9035 46 - KIT 8000H - 30-35HP - DIRECT DRIVEN - WITH DRYER 2200 9035 45 - KIT 8000H - 30-35HP - DIRECT DRIVEN - WITHOUT DRYER 2200 9035 42 - KIT 8000H - 30-35HP - GEAR DRIVEN - WITH DRYER 2200 9035 41 - KIT 8000H - 30-35HP - GEAR DRIVEN - WITHOUT DRYER 2901 3531 00 - THERMOSTATIC VALVE KIT - 8000H		
2110		1	O-RING	**(21/08/2018 - 21/08/2018)** MODEL:CPBG20_18J , MODEL:CPBG25_18J , MODEL:CPBG29_18J , MODEL:CPBG34_18J **(22/08/2018 - ...)**
	Service kits:	2200 9035 44 - KIT 8000H - 20-25HP - DIRECT DRIVEN - WITH DRYER 2200 9035 43 - KIT 8000H - 20-25HP - DIRECT DRIVEN - WITHOUT DRYER 2200 9035 40 - KIT 8000H - 20-25HP - GEAR DRIVEN - WITH DRYER 2200 9035 39 - KIT 8000H - 20-25HP - GEAR DRIVEN - WITHOUT DRYER 2200 9035 46 - KIT 8000H - 30-35HP - DIRECT DRIVEN - WITH DRYER 2200 9035 45 - KIT 8000H - 30-35HP - DIRECT DRIVEN - WITHOUT DRYER 2200 9035 42 - KIT 8000H - 30-35HP - GEAR DRIVEN - WITH DRYER 2200 9035 41 - KIT 8000H - 30-35HP - GEAR DRIVEN - WITHOUT DRYER 2901 3531 00 - THERMOSTATIC VALVE KIT - 8000H		
2120	1622 6576 01	1	HOUSING	**(21/08/2018 - 21/08/2018)** MODEL:CPBG20_18J , MODEL:CPBG25_18J , MODEL:CPBG29_18J , MODEL:CPBG34_18J **(22/08/2018 - ...)**
2130		1	THERMOSTATIC VALVE 60°C	**(21/08/2018 - 21/08/2018)** MODEL:CPBG20_18J , MODEL:CPBG25_18J , MODEL:CPBG29_18J , MODEL:CPBG34_18J **(22/08/2018 - ...)**
	Service kits:	2200 9035 44 - KIT 8000H - 20-25HP - DIRECT DRIVEN - WITH DRYER 2200 9035 43 - KIT 8000H - 20-25HP - DIRECT DRIVEN - WITHOUT DRYER 2200 9035 40 - KIT 8000H - 20-25HP - GEAR DRIVEN - WITH DRYER 2200 9035 39 - KIT 8000H - 20-25HP - GEAR DRIVEN - WITHOUT DRYER 2200 9035 46 - KIT 8000H - 30-35HP - DIRECT DRIVEN - WITH DRYER 2200 9035 45 - KIT 8000H - 30-35HP - DIRECT DRIVEN - WITHOUT DRYER 2200 9035 42 - KIT 8000H - 30-35HP - GEAR DRIVEN - WITH DRYER 2200 9035 41 - KIT 8000H - 30-35HP - GEAR DRIVEN - WITHOUT DRYER 2901 3531 00 - THERMOSTATIC VALVE KIT - 8000H		
2140	0663 2116 84	2	O-RING	**(21/08/2018 - 21/08/2018)** MODEL:CPBG20_18J , MODEL:CPBG25_18J , MODEL:CPBG29_18J , MODEL:CPBG34_18J **(22/08/2018 - ...)**
2150	0663 2116 85	1	O-RING	**(21/08/2018 - 21/08/2018)** MODEL:CPBG20_18J , MODEL:CPBG25_18J , MODEL:CPBG29_18J , MODEL:CPBG34_18J **(22/08/2018 - ...)**
2160	0663 2116 86	1	O-RING	**(21/08/2018 - 21/08/2018)** MODEL:CPBG20_18J , MODEL:CPBG25_18J , MODEL:CPBG29_18J , MODEL:CPBG34_18J **(22/08/2018 - ...)**

Legend:

MAPPR:AS1210 - Pressure Vessel Approval:AS1210
MAPPR:CRNASME - Pressure Vessel Approval:CRN (based on ASME)
MODEL:CPBG20_18J - Model:CPBg 20
MODEL:CPBG34_18J - Model:CPBg 34
MODEL:CPVD29_18J - Model:CPVSd 29
MAPPR:ASME - Pressure Vessel Approval:ASME (U Stamp)
MAPPR:MOM - Pressure Vessel Approval:MOM
MODEL:CPBG25_18J - Model:CPBg 25
MODEL:CPVD21_18J - Model:CPVSd 21
MODEL:CPVD34_18J - Model:CPVSd 34
MAPPR:CE - Pressure Vessel Approval:CE
MAPPR:SA - Pressure Vessel Approval:SA
MODEL:CPBG29_18J - Model:CPBg 29
MODEL:CPVD25_18J - Model:CPVSd 25

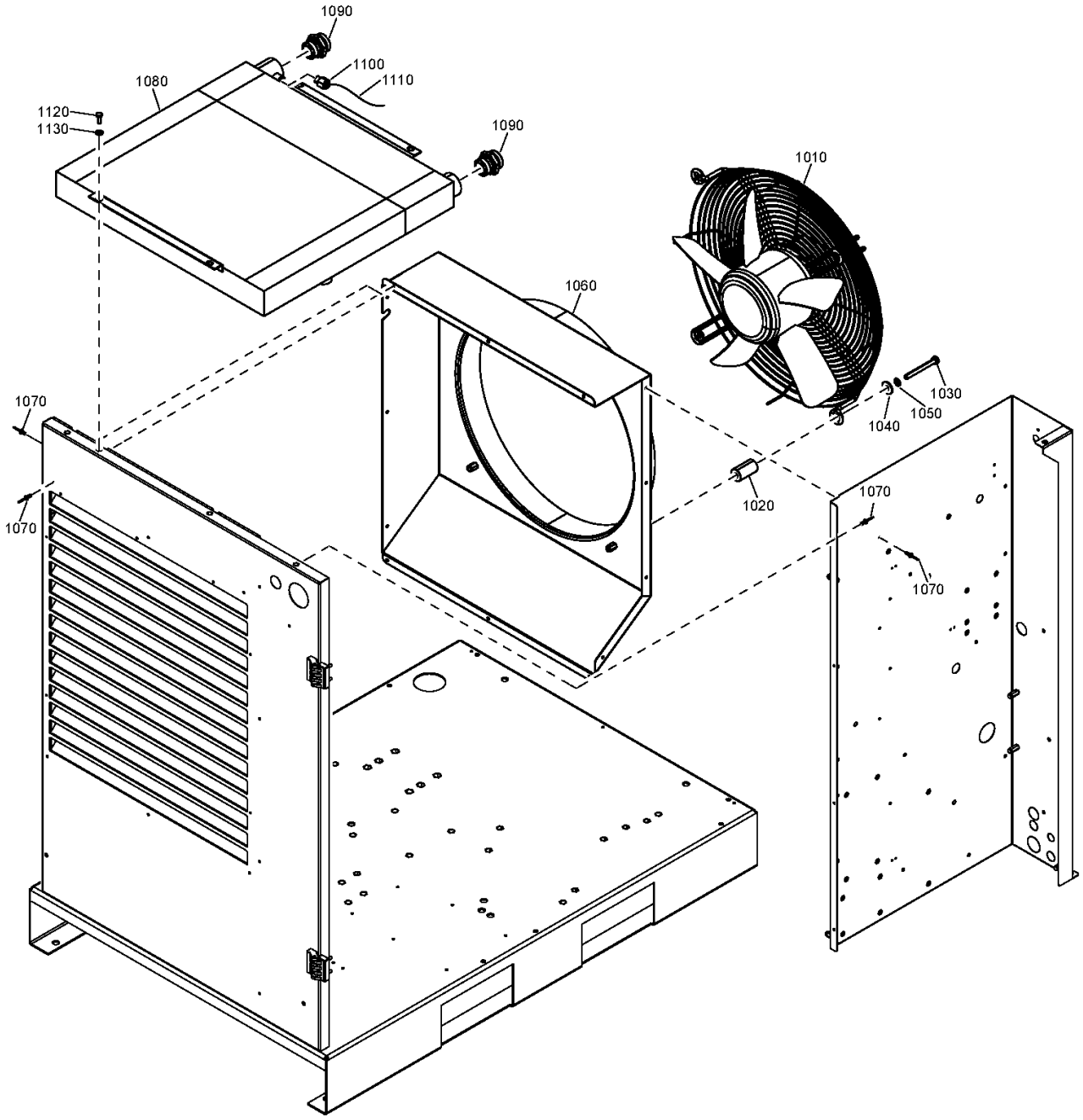
1090
1100
1110
1080
1120
1130
1090
1010
1060
1030
1050
1040
1070
1070
1020
1070
1070

Ref	Part Number	Qty	Name	Validity
1010	1624 9608 00	1	FAN	**(21/08/2018 - ...)** (MODEL:CPBG29_18J , MODEL:CPBG34_18J) + FREQ:50HZ
1010	1624 9609 00	1	FAN	**(21/08/2018 - ...)** FREQ:60HZ + MODEL:CPBG34_18J
1010	2204 1076 00	1	FAN	**(21/08/2018 - ...)** MODEL:CPBG20_18J
1010	2203 0488 00	1	FAN	**(21/08/2018 - ...)** FREQ:60HZ + MODEL:CPBG29_18J , MODEL:CPBG25_18J
1020	2203 0210 03	4	SPACER	**(21/08/2018 - ...)** FREQ:50HZ + MODEL:CPBG29_18J , MODEL:CPBG34_18J
1020	2203 0210 04	4	SPACER	**(21/08/2018 - ...)** FREQ:60HZ + MODEL:CPBG29_18J , MODEL:CPBG20_18J , MODEL:CPBG25_18J
1030	0147 1329 03	4	HEXAGON BOLT	**(21/08/2018 - ...)** FREQ:60HZ + MODEL:CPBG29_18J , MODEL:CPBG20_18J , MODEL:CPBG25_18J
1030	0147 1335 03	4	HEXAGON BOLT	**(21/08/2018 - ...)** FREQ:50HZ + MODEL:CPBG29_18J , MODEL:CPBG34_18J
1040	0300 8019 00	4	PLAIN WASHER	**(21/08/2018 - ...)**
1050	0333 3100 17	4	WASHER	**(21/08/2018 - ...)**
1060	2204 1534 03	1	FAN BAFFLE	**(21/08/2018 - ...)** FREQ:50HZ + MODEL:CPBG29_18J , MODEL:CPBG34_18J
1060	2204 1534 01	1	FAN BAFFLE	**(21/08/2018 - ...)** MODEL:CPBG20_18J
1060	2204 1534 02	1	FAN BAFFLE	**(21/08/2018 - ...)** FREQ:60HZ + MODEL:CPBG29_18J , MODEL:CPBG25_18J
1070	0129 3270 46	17	BLIND RIVET	**(20/12/2018 - ...)**
1080	2203 0400 00	1	COMBI COOLER	**(21/08/2018 - ...)**
1090	0580 0017 37	2	FITTING PIPE	**(21/08/2018 - ...)**
1100	9090 1508 00	1	STRAIGHT COUPLING	**(21/08/2018 - ...)**
1110	0070 6002 48	AR	HOSE	**(21/08/2018 - ...)**
1120	0147 1246 03	2	HEXAGON HEAD SCREW	**(21/08/2018 - ...)**
1130	0333 3100 05	2	LOCK WASHER	**(21/08/2018 - ...)**

Legend:

FREQ:50HZ - Frequency:50 Hz
FREQ:60HZ - Frequency:60 Hz
MODEL:CPBG20_18J - Model:CPBg 20
MODEL:CPBG25_18J - Model:CPBg 25
MODEL:CPBG29_18J - Model:CPBg 29
MODEL:CPBG34_18J - Model:CPBg 34

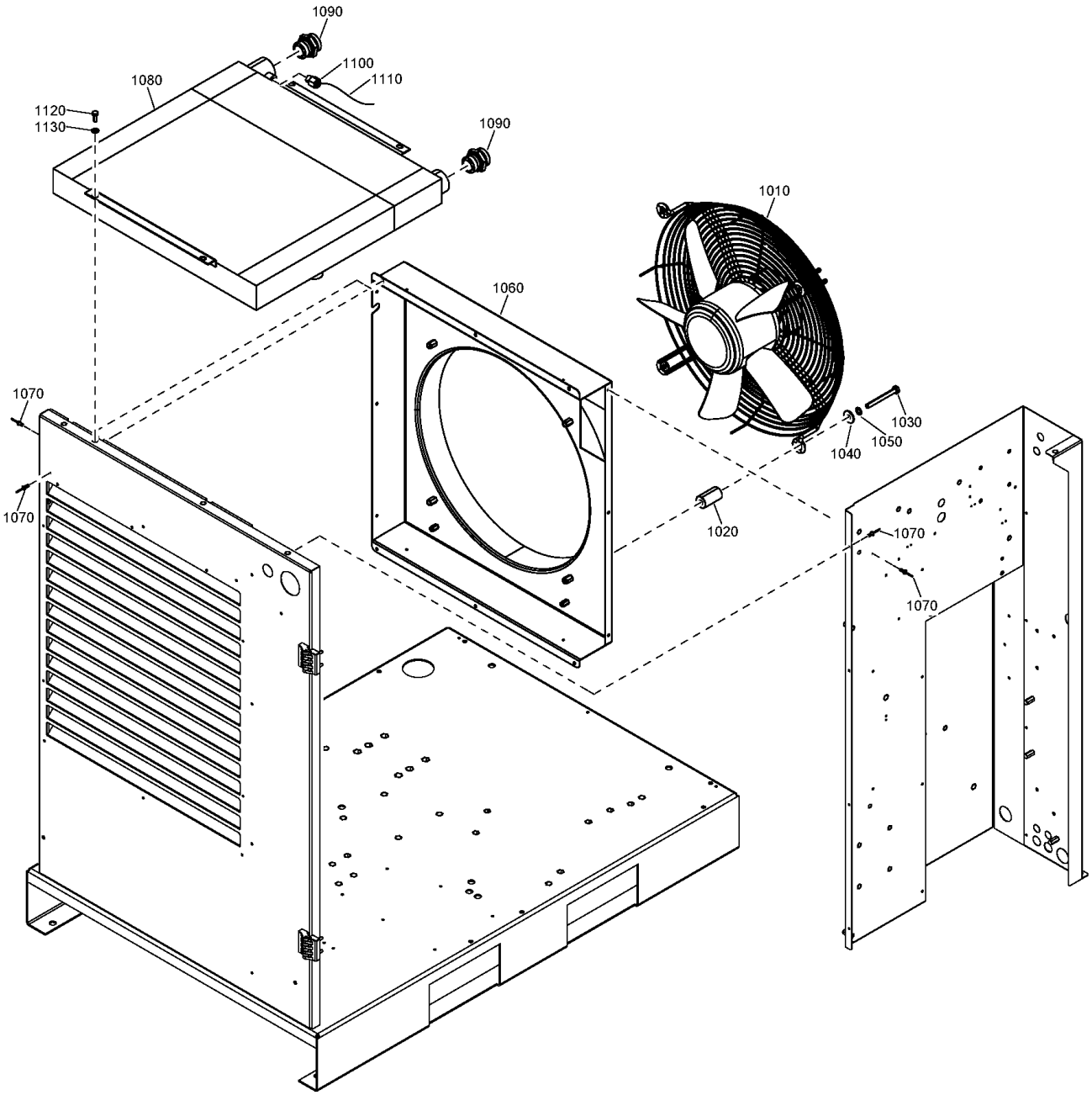
1090
1100
1110
1080
1120
1130
1090
1010
1060
1070
1070
1030
1050
1040
1020
1070
1070

Ref	Part Number	Qty	Name	Validity
1010	1624 9608 00	1	FAN	**(22/08/2018 - ...)** (MODEL:CPVD29_18J , MODEL:CPVD34_18J) + FREQ:50HZ
1010	2203 0488 00	1	FAN	**(22/08/2018 - ...)** FREQ:60HZ + MODEL:CPVD29_18J , MODEL:CPVD25_18J
1010	2204 1076 00	1	FAN	**(22/08/2018 - ...)** MODEL:CPVD21_18J
1010	1624 9609 00	1	FAN	**(22/08/2018 - ...)** FREQ:60HZ + MODEL:CPVD34_18J
1020	2203 0210 04	4	SPACER	**(22/08/2018 - ...)** FREQ:60HZ + MODEL:CPVD29_18J , MODEL:CPVD21_18J , MODEL:CPVD25_18J
1020	2203 0210 03	4	SPACER	**(22/08/2018 - ...)** FREQ:50HZ + MODEL:CPVD29_18J , MODEL:CPVD34_18J
1030	0147 1335 03	4	HEXAGON BOLT	**(22/08/2018 - ...)** FREQ:50HZ + MODEL:CPVD29_18J , MODEL:CPVD34_18J
1030	0147 1329 03	4	HEXAGON BOLT	**(22/08/2018 - ...)** FREQ:60HZ + MODEL:CPVD29_18J , MODEL:CPVD21_18J , MODEL:CPVD25_18J
1040	0300 8019 00	4	PLAIN WASHER	**(22/08/2018 - ...)**
1050	0333 3100 17	4	WASHER	**(22/08/2018 - ...)**
1060	2204 1777 02	1	FAN BAFFLE	**(22/08/2018 - ...)** FREQ:60HZ + MODEL:CPVD29_18J , MODEL:CPVD25_18J
1060	2204 1777 03	1	FAN BAFFLE	**(22/08/2018 - ...)** FREQ:50HZ + MODEL:CPVD29_18J , MODEL:CPVD34_18J
1060	2204 1777 01	1	FAN BAFFLE	**(22/08/2018 - ...)** MODEL:CPVD21_18J
1070	0129 3270 46	16	BLIND RIVET	**(22/08/2018 - ...)**
1080	2203 0400 00	1	COMBI COOLER	**(22/08/2018 - ...)**
1090	0580 0017 37	2	FITTING PIPE	**(22/08/2018 - ...)**
1100	9090 1508 00	1	STRAIGHT COUPLING	**(22/08/2018 - ...)**
1110	0070 6002 48	AR	HOSE	**(22/08/2018 - ...)**
1120	0147 1246 03	2	HEXAGON HEAD SCREW	**(22/08/2018 - ...)**
1130	0333 3100 05	2	LOCK WASHER	**(22/08/2018 - ...)**

Legend:

FREQ:50HZ - Frequency:50 Hz
FREQ:60HZ - Frequency:60 Hz
MODEL:CPVD21_18J - Model:CPVSd 21
MODEL:CPVD25_18J - Model:CPVSd 25
MODEL:CPVD29_18J - Model:CPVSd 29
MODEL:CPVD34_18J - Model:CPVSd 34

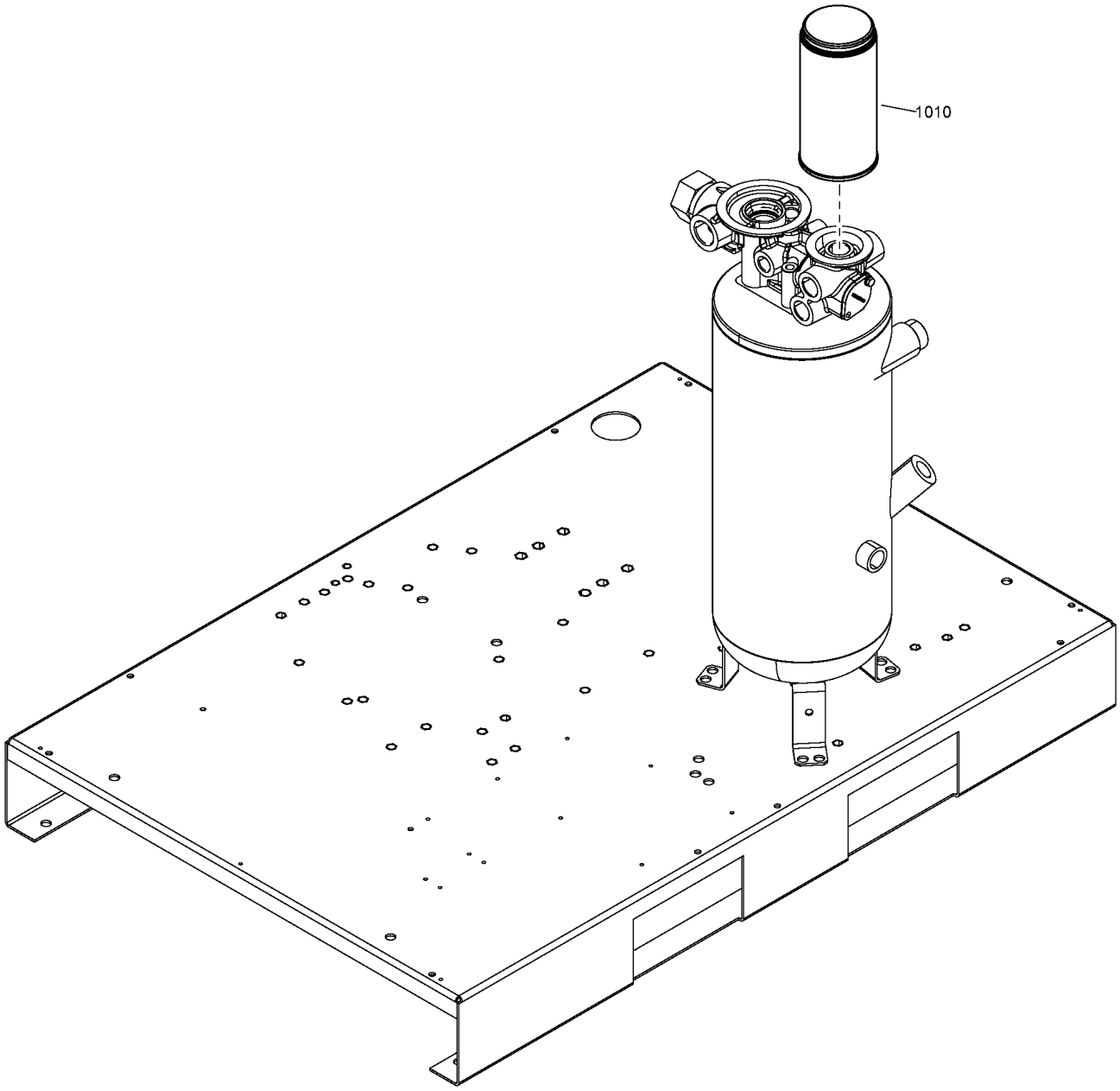
1010

Ref	Part Number	Qty	Name	Validity
1010		1	OIL FILTER	(21/08/2018 - ...)
	Service kits:		2200 9035 46 - KIT 8000H - 30-35HP - DIRECT DRIVEN - WITH DRYER 2200 9035 45 - KIT 8000H - 30-35HP - DIRECT DRIVEN - WITHOUT DRYER 2200 9035 44 - KIT 8000H - 20-25HP - DIRECT DRIVEN - WITH DRYER 2200 9035 43 - KIT 8000H - 20-25HP - DIRECT DRIVEN - WITHOUT DRYER 2200 9035 42 - KIT 8000H - 30-35HP - GEAR DRIVEN - WITH DRYER 2200 9035 41 - KIT 8000H - 30-35HP - GEAR DRIVEN - WITHOUT DRYER 2200 9035 40 - KIT 8000H - 20-25HP - GEAR DRIVEN - WITH DRYER 2200 9035 39 - KIT 8000H - 20-25HP - GEAR DRIVEN - WITHOUT DRYER 2200 9035 09 - KIT 4000H - 30-35HP - DIRECT DRIVEN - WITH DRYER 2200 9035 08 - KIT 4000H - 30-35HP - DIRECT DRIVEN - WITHOUT DRYER 2200 9035 07 - KIT 4000H - 20-25HP - DIRECT DRIVEN - WITH DRYER 2200 9035 06 - KIT 4000H - 20-25HP - DIRECT DRIVEN - WITHOUT DRYER 2200 9035 05 - KIT 4000H - 30-35HP - GEAR DRIVEN - WITH DRYER 2200 9035 04 - KIT 4000H - 30-35HP - GEAR DRIVEN - WITHOUT DRYER 2200 9035 03 - KIT 4000H - 20-25HP - GEAR DRIVEN - WITH DRYER 2200 9035 02 - KIT 4000H - 20-25HP - GEAR DRIVEN - WITHOUT DRYER 2200 9035 01 - KIT 2000H - WITH DRYER 2200 9035 00 - KIT 2000H - WITHOUT DRYER	

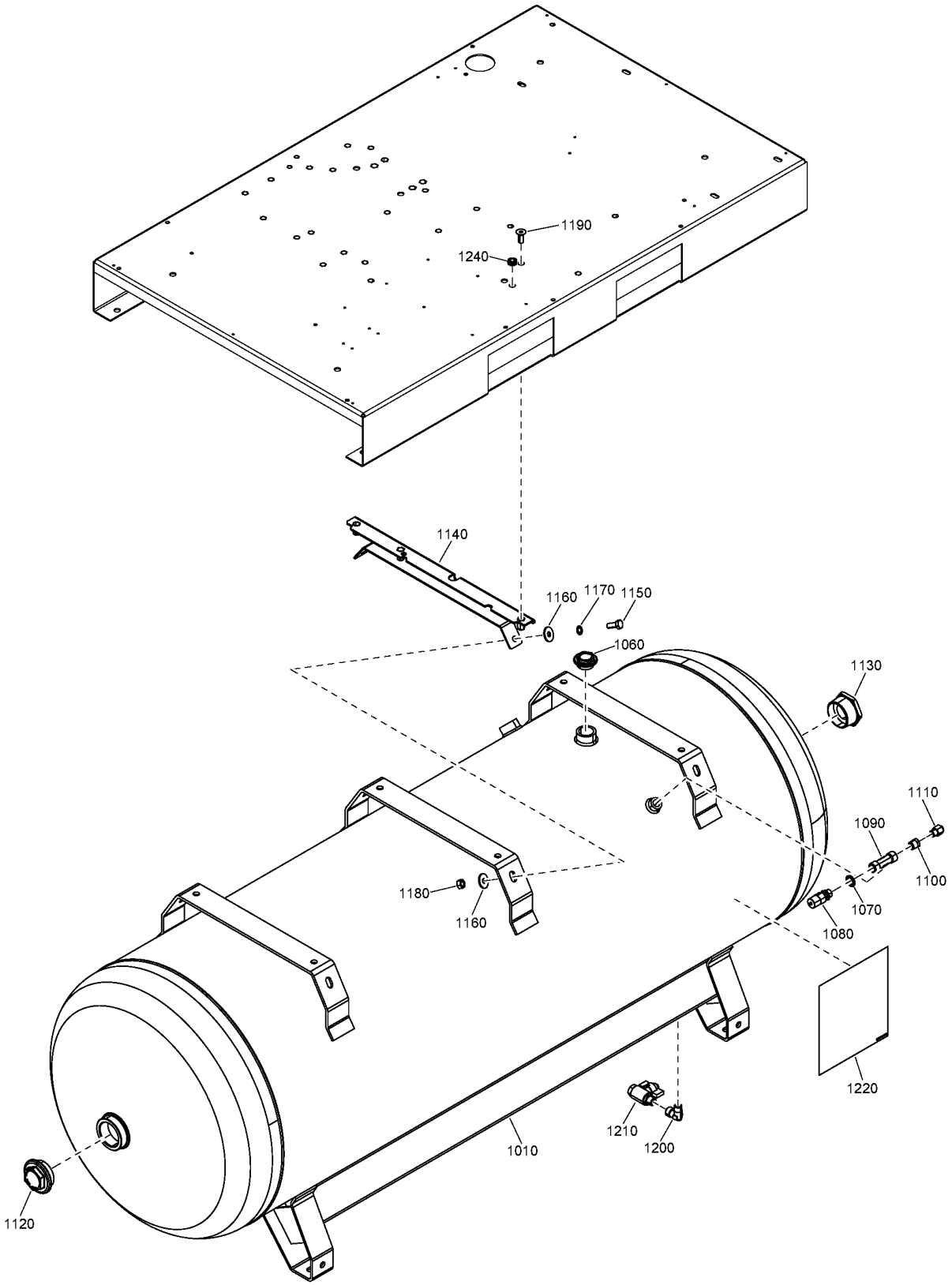
1190
1240
1140
1160
1170
1150
1060
1130
1110
1090
1100
1070
1080
1180
1160
1220
1210
1200
1010
1120

12 - Air receiver AS1210, CE, MOM, SA

(MAPPR:AS1210 , MAPPR:CE , MAPPR:MOM , MAPPR:SA) + MDVAR:CU

Ref	Part Number	Qty	Name	Validity
1010	~~2204 1772 08~~	1	VESSEL	**(21/08/2018 - ...)** MAPPR:SA
	Substituted by:	2202 9783 63 - SP.VESSEL500L ASMECRN 7021 200 (quantity: 1)		
1010	2204 1772 10	1	VESSEL	**(21/08/2018 - ...)** MAPPR:MOM
1010	~~2204 1772 06~~	1	VESSEL	**(21/08/2018 - ...)** MAPPR:CE
	Substituted by:	2202 9783 66 - SP VESS.500L CE 16B C67 (quantity: 1)		
1010	~~2204 1772 07~~	1	VESSEL	**(21/08/2018 - ...)** MAPPR:AS1210
	Substituted by:	2202 9783 67 - SP VESS.500L DIR 14B C67 (quantity: 1)		
1060	2202 9286 02	1	PLUG	**(21/08/2018 - ...)**
1070	0661 1000 40	1	SEAL WASHER	**(21/08/2018 - ...)**
1080	2202 8891 09	1	SAFETY VALVE	**(23/08/2018 - ...)**
1090	9740 2027 33	1	FITTING TEE	**(04/10/2018 - ...)**
1100	0605 8300 82	1	BUSHING	**(04/10/2018 - ...)**
1110	9090 1508 00	1	STRAIGHT COUPLING	**(04/10/2018 - ...)**
1120	2200 7509 11	1	PLUG	**(21/08/2018 - ...)**
1130	0605 8534 03	1	BUSHING	**(21/08/2018 - ...)**
1140	2204 1776 00	3	SUPPORT	**(21/08/2018 - ...)**
1150	0147 1362 03	6	HEXAGON HEAD SCREW	**(21/08/2018 - ...)**
1160	0300 0274 17	12	PLAIN WASHER	**(21/08/2018 - ...)**
1170	0333 4232 00	6	WASHER	**(21/08/2018 - ...)**
1180	0266 2111 00	6	HEXAGON NUT	**(21/08/2018 - ...)**
1190	0215 0010 85	6	SCREW	**(21/08/2018 - ...)**
1200	0605 9500 42	1	ELBOW COUPLING	**(21/08/2018 - ...)**
1210	0852 0010 09	1	BALL VALVE	**(21/08/2018 - ...)**
1220	1079 9931 29	1	DECAL WARNING	**(21/08/2018 - ...)**
1240	0989 4220 45	1	GROMMET	**(21/08/2018 - ...)**

Legend:

MAPPR:AS1210 - Pressure Vessel Approval:AS1210
MAPPR:CE - Pressure Vessel Approval:CE
MAPPR:MOM - Pressure Vessel Approval:MOM
MAPPR:SA - Pressure Vessel Approval:SA
MDVAR:CU - Variant:Receiver mounted

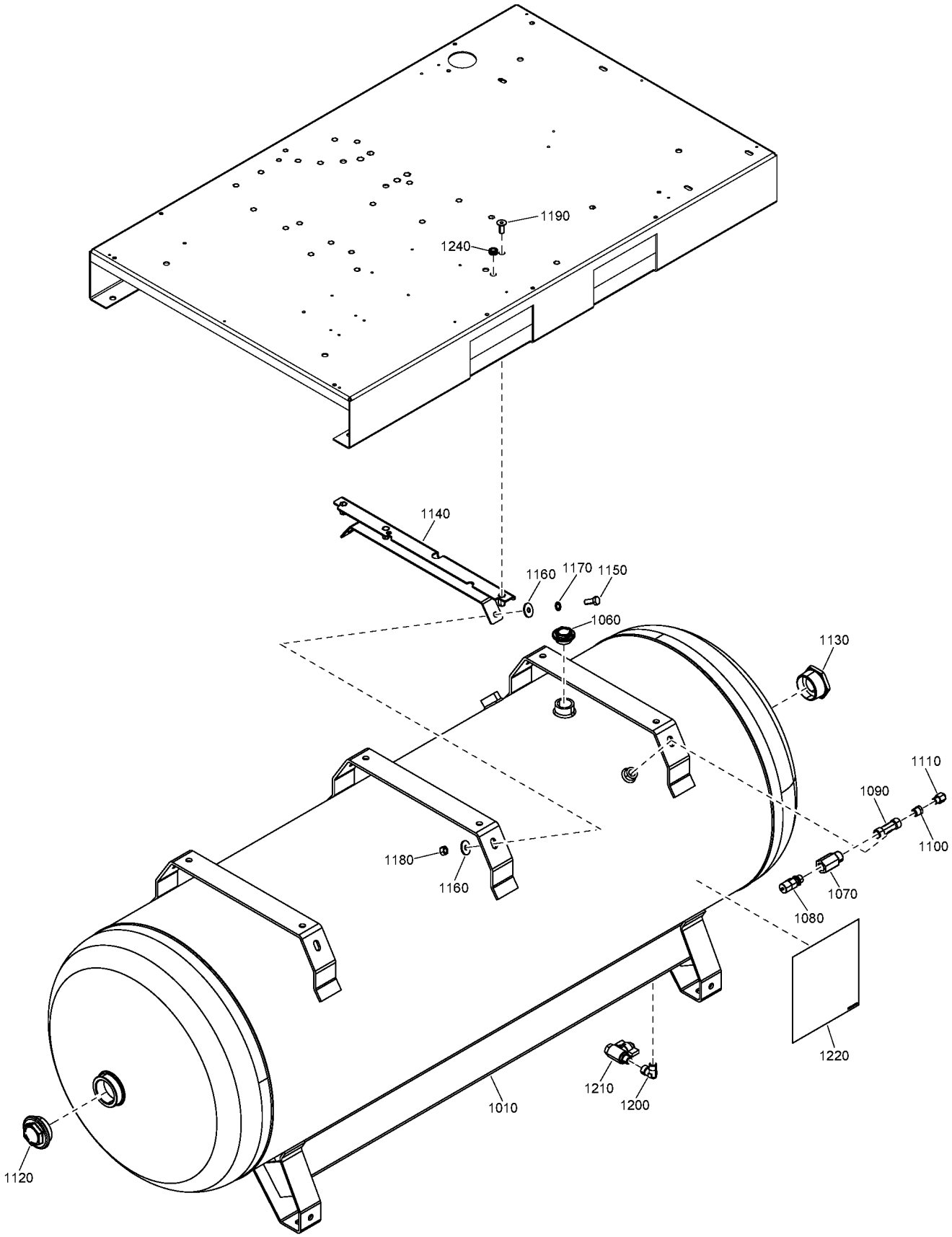
1190
1240
1140
1160
1170
1150
1060
1130
1110
1090
1100
1180
1160
1070
1080
1220
1210
1200
1010
1120

Ref	Part Number	Qty	Name	Validity
1010	~~2204 1772 08~~	1	VESSEL	**(21/08/2018 - ...)**
	Substituted by:	2202 9783 63 - SP.VESSEL500L ASMECRN 7021 200 (quantity: 1)		
1060	2202 9286 02	1	PLUG	**(21/08/2018 - ...)**
1070	2202 9666 00	1	REDUCER	**(21/08/2018 - ...)**
1080	0830 1010 58	1	SAFETY VALVE	**(21/08/2018 - ...)**
1090	9740 2027 33	1	FITTING TEE	**(04/10/2018 - ...)**
1100	0605 8300 82	1	BUSHING	**(04/10/2018 - ...)**
1110	9090 1508 00	1	STRAIGHT COUPLING	**(04/10/2018 - ...)**
1120	2200 7509 11	1	PLUG	**(21/08/2018 - ...)**
1130	0605 8534 03	1	BUSHING	**(21/08/2018 - ...)**
1140	2204 1776 00	3	SUPPORT	**(21/08/2018 - ...)**
1150	0147 1362 03	6	HEXAGON HEAD SCREW	**(21/08/2018 - ...)**
1160	0300 0274 17	12	PLAIN WASHER	**(21/08/2018 - ...)**
1170	0333 4232 00	6	WASHER	**(21/08/2018 - ...)**
1180	0266 2111 00	6	HEXAGON NUT	**(21/08/2018 - ...)**
1190	0215 0010 85	6	SCREW	**(21/08/2018 - ...)**
1200	0605 9500 42	1	ELBOW COUPLING	**(21/08/2018 - ...)**
1210	0852 0010 09	1	BALL VALVE	**(21/08/2018 - ...)**
1220	1079 9931 29	1	DECAL WARNING	**(21/08/2018 - ...)**
1240	0989 4220 45	1	GROMMET	**(21/08/2018 - ...)**

Legend:

MAPPR:ASME - Pressure Vessel Approval:ASME (U Stamp)

MAPPR:CRNASME - Pressure Vessel Approval:CRN (based on ASME)

MDVAR:CU - Variant:Receiver mounted

14 - Air outlet CPBg 20, CPBg 25, CPVSd 21, CPVSd 25 - Floor-mounted - Without dryer

(MODEL:CPBG20_18J , MODEL:CPBG25_18J , MODEL:CPVD21_18J , MODEL:CPVD25_18J) + IDRY:N + MDVAR:FMOUNTED

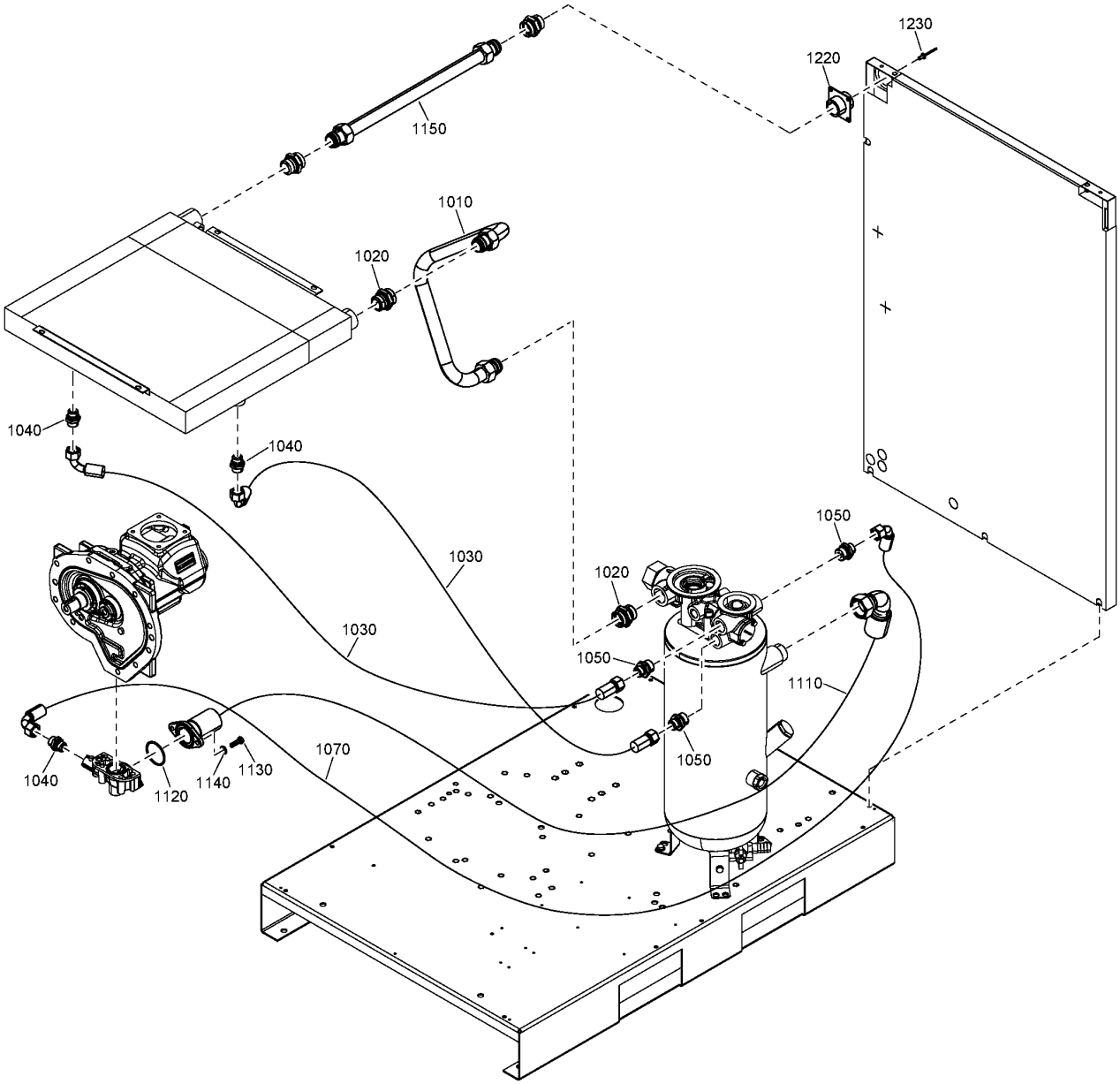

14 - Air outlet CPBg 20, CPBg 25, CPVSd 21, CPVSd 25 - Floor-mounted - Without dryer

(MODEL:CPBG20_18J , MODEL:CPBG25_18J , MODEL:CPVD21_18J , MODEL:CPVD25_18J) + IDRY:N + MDVAR:FMOUNTED

Ref	Part Number	Qty	Name	Validity
1010	2204 1527 00	1	PIPE	**(21/08/2018 - 21/08/2018)** MODEL:CPBG20_18J , MODEL:CPBG25_18J **(22/08/2018 - ...)**
1020	0580 0017 37	2	FITTING PIPE	**(21/08/2018 - 21/08/2018)** MODEL:CPBG20_18J , MODEL:CPBG25_18J **(22/08/2018 - ...)**
1030	2202 9325 01	2	HOSE	**(21/08/2018 - 21/08/2018)** MODEL:CPBG20_18J , MODEL:CPBG25_18J **(22/08/2018 - ...)**
1040	0580 0015 40	3	NIPPLE	**(21/08/2018 - 21/08/2018)** MODEL:CPBG20_18J , MODEL:CPBG25_18J **(22/08/2018 - ...)**
1050	0580 0015 41	3	NIPPLE	**(21/08/2018 - 21/08/2018)** MODEL:CPBG20_18J , MODEL:CPBG25_18J **(22/08/2018 - ...)**
1070	2202 9325 08	1	HOSE	**(21/08/2018 - 21/08/2018)** MODEL:CPBG20_18J , MODEL:CPBG25_18J **(22/08/2018 - ...)**
1110	2204 1713 03	1	HOSE	**(21/08/2018 - 21/08/2018)** MODEL:CPBG20_18J , MODEL:CPBG25_18J **(22/08/2018 - ...)**
1120	0663 7134 00	1	O-RING	**(21/08/2018 - 21/08/2018)** MODEL:CPBG20_18J , MODEL:CPBG25_18J **(22/08/2018 - ...)**
1130	0147 1325 03	2	HEXAGON HEAD SCREW	**(21/08/2018 - 21/08/2018)** MODEL:CPBG20_18J , MODEL:CPBG25_18J **(22/08/2018 - ...)**
1140	2202 9045 01	2	WASHER	**(21/08/2018 - 21/08/2018)** MODEL:CPBG20_18J , MODEL:CPBG25_18J **(22/08/2018 - ...)**
1150	2204 1855 01	1	PIPE	**(21/08/2018 - 21/08/2018)** MODEL:CPBG20_18J , MODEL:CPBG25_18J **(22/08/2018 - ...)**
1220	2203 0236 00	1	SUPPORT	**(21/08/2018 - 21/08/2018)** MODEL:CPBG20_18J , MODEL:CPBG25_18J **(22/08/2018 - ...)**
1230	0129 3270 38	4	RIVET	**(21/08/2018 - 21/08/2018)** MODEL:CPBG20_18J , MODEL:CPBG25_18J **(22/08/2018 - ...)**

Legend:

IDRY:N - Integrated dryer:No
MDVAR:FMOUNTED - Variant:Floor Mounted
MODEL:CPBG20_18J - Model:CPBg 20
MODEL:CPBG25_18J - Model:CPBg 25
MODEL:CPVD21_18J - Model:CPVSd 21
MODEL:CPVD25_18J - Model:CPVSd 25

15 - Air outlet CPBg 29, CPVSd 29 - Floor-mounted - Without dryer

(MODEL:CPBG29_18J , MODEL:CPVD29_18J) + IDRY:N + MDVAR:FMOUNTED

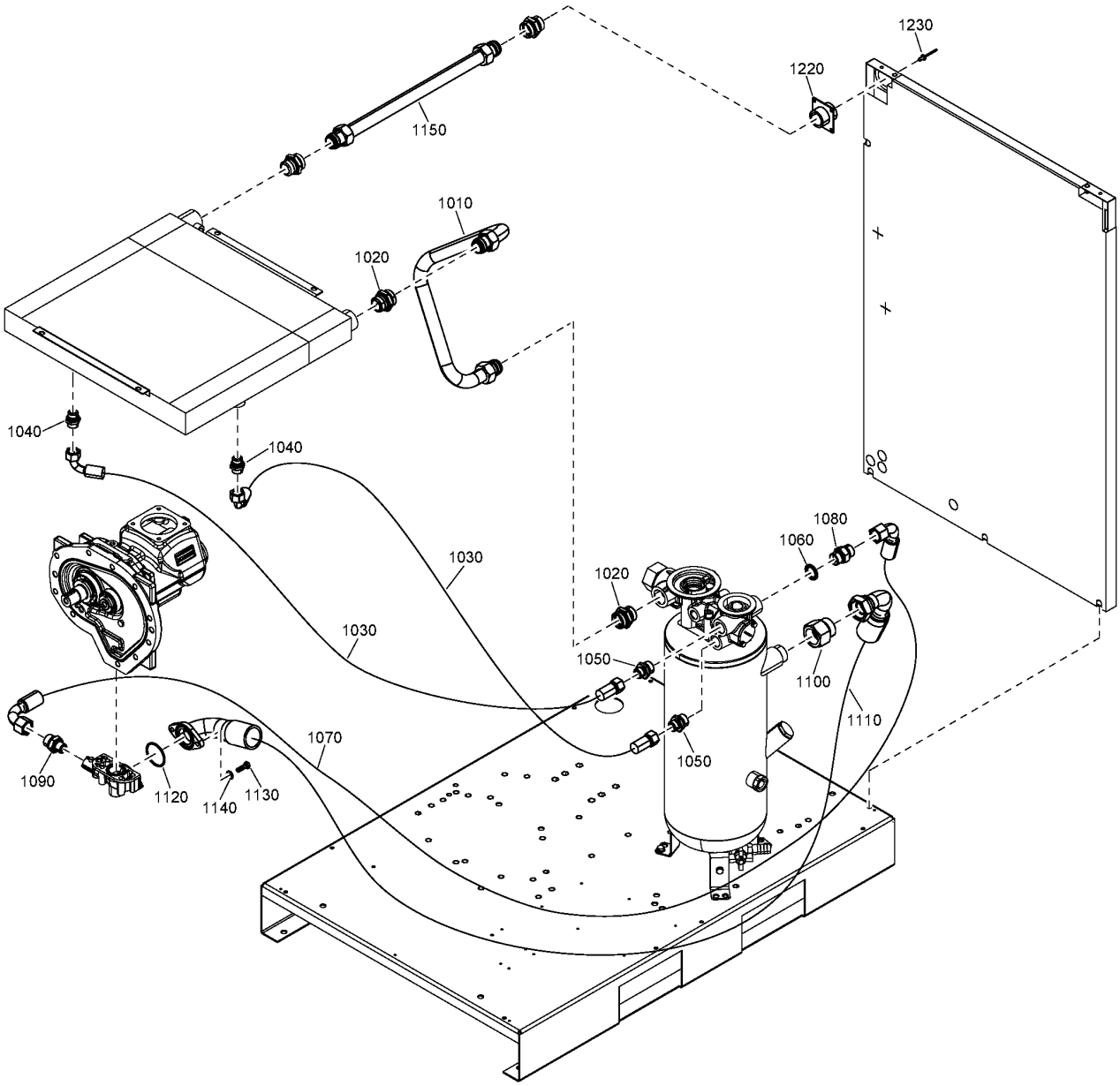

Ref	Part Number	Qty	Name	Validity
1010	2204 1527 00	1	PIPE	**(21/08/2018 - 21/08/2018) (22/08/2018 - ...)** MODEL:CPBG29_18J
1020	0580 0017 37	2	FITTING PIPE	**(21/08/2018 - 21/08/2018) (22/08/2018 - ...)** MODEL:CPBG29_18J
1030	2202 9325 01	2	HOSE	**(21/08/2018 - 21/08/2018) (22/08/2018 - ...)** MODEL:CPBG29_18J
1040	0580 0015 40	2	NIPPLE	**(21/08/2018 - 21/08/2018) (22/08/2018 - ...)** MODEL:CPBG29_18J
1050	0580 0015 41	2	NIPPLE	**(21/08/2018 - 21/08/2018) (22/08/2018 - ...)** MODEL:CPBG29_18J
1060	0661 1000 43	1	SEAL WASHER	**(21/08/2018 - 21/08/2018) (22/08/2018 - ...)** MODEL:CPBG29_18J
1070	2202 9325 17	1	HOSE	**(21/08/2018 - 21/08/2018) (22/08/2018 - ...)** MODEL:CPBG29_18J
1080	0603 4243 02	1	NIPPLE	**(21/08/2018 - 21/08/2018) (22/08/2018 - ...)** MODEL:CPBG29_18J
1090	0603 5522 03	1	NIPPLE	**(21/08/2018 - 21/08/2018) (22/08/2018 - ...)** MODEL:CPBG29_18J
1100	2202 9594 01	1	ADAPTER	**(21/08/2018 - 21/08/2018) (22/08/2018 - ...)** MODEL:CPBG29_18J
1110	2204 1533 02	1	HOSE	**(21/08/2018 - 21/08/2018) (22/08/2018 - ...)** MODEL:CPBG29_18J
1120	0663 7134 00	1	O-RING	**(21/08/2018 - 21/08/2018) (22/08/2018 - ...)** MODEL:CPBG29_18J
1130	0147 1325 03	2	HEXAGON HEAD SCREW	**(21/08/2018 - 21/08/2018) (22/08/2018 - ...)** MODEL:CPBG29_18J
1140	2202 9045 01	2	WASHER	**(21/08/2018 - 21/08/2018) (22/08/2018 - ...)** MODEL:CPBG29_18J
1150	2204 1855 01	1	PIPE	**(21/08/2018 - 21/08/2018) (22/08/2018 - ...)** MODEL:CPBG29_18J
1220	2203 0236 00	1	SUPPORT	**(21/08/2018 - 21/08/2018) (22/08/2018 - ...)** MODEL:CPBG29_18J
1230	0129 3270 38	4	RIVET	**(21/08/2018 - 21/08/2018) (22/08/2018 - ...)** MODEL:CPBG29_18J

Legend:

IDRY:N - Integrated dryer:No
MDVAR:FMOUNTED - Variant:Floor Mounted
MODEL:CPBG29_18J - Model:CPBg 29
MODEL:CPVD29_18J - Model:CPVSd 29

16 - Air outlet CPBg 34, CPVSd 34 - Floor-mounted - Without dryer

(MODEL:CPBG34_18J , MODEL:CPVD34_18J) + IDRY:N + MDVAR:FMOUNTED

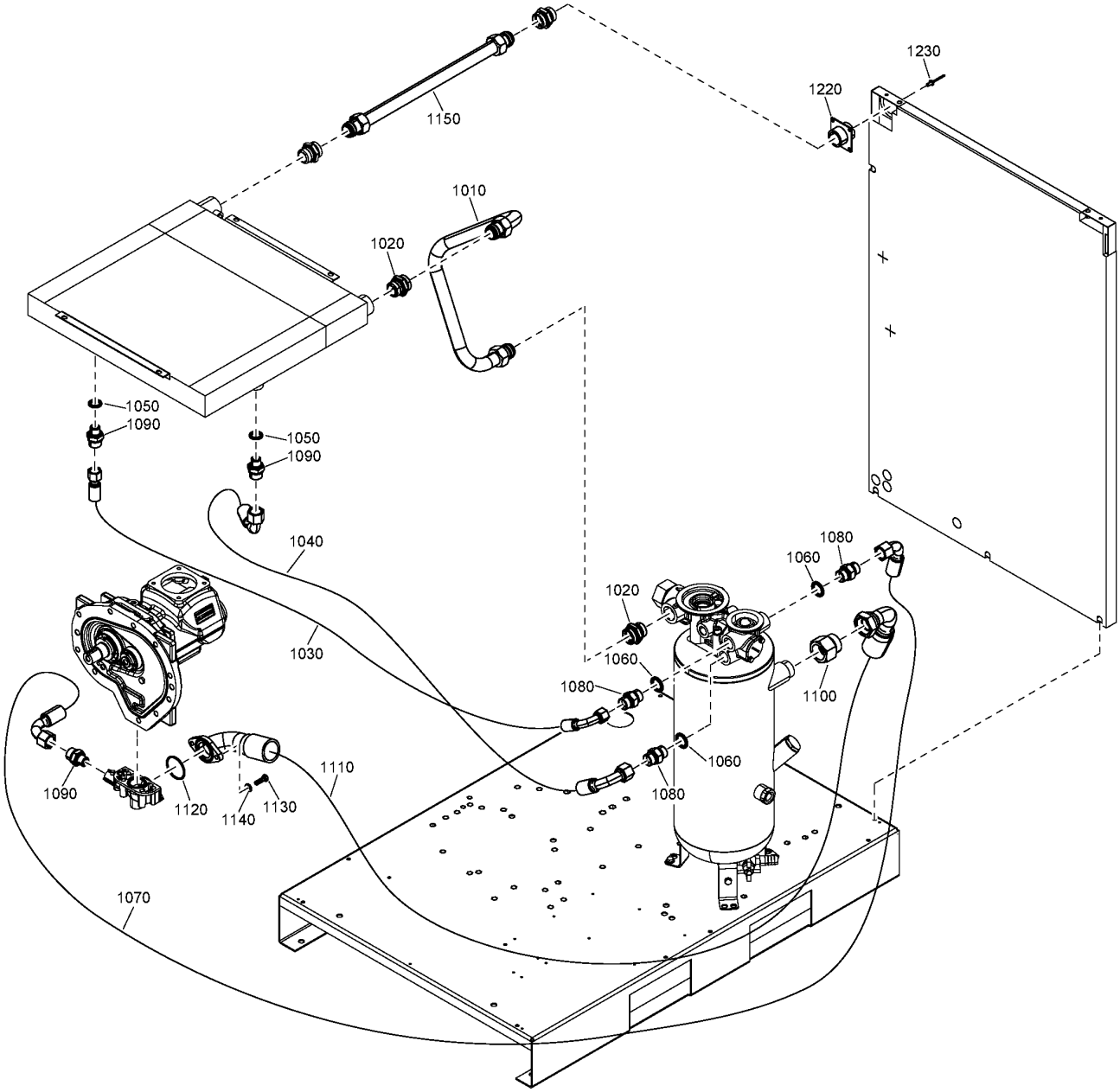

Ref	Part Number	Qty	Name	Validity
1010	2204 1527 00	1	PIPE	**(21/08/2018 - 21/08/2018)** MODEL:CPBG34_18J **(22/08/2018 - ...)**
1020	0580 0017 37	2	FITTING PIPE	**(21/08/2018 - 21/08/2018)** MODEL:CPBG34_18J **(22/08/2018 - ...)**
1030	2202 8681 10	1	HOSE	**(20/11/2018 - ...)**
1040	2202 9325 17	1	HOSE	**(20/11/2018 - ...)**
1050	0661 1000 39	2	SEAL WASHER	**(21/08/2018 - 21/08/2018)** MODEL:CPBG34_18J **(22/08/2018 - ...)**
1060	0661 1000 43	3	SEAL WASHER	**(21/08/2018 - 21/08/2018)** MODEL:CPBG34_18J **(22/08/2018 - ...)**
1070	2202 9325 17	1	HOSE	**(21/08/2018 - 21/08/2018)** MODEL:CPBG34_18J **(22/08/2018 - ...)**
1080	0603 4243 02	3	NIPPLE	**(21/08/2018 - 21/08/2018)** MODEL:CPBG34_18J **(22/08/2018 - ...)**
1090	0603 5522 03	3	NIPPLE	**(21/08/2018 - 21/08/2018)** MODEL:CPBG34_18J **(22/08/2018 - ...)**
1100	2202 9594 01	1	ADAPTER	**(21/08/2018 - 21/08/2018)** MODEL:CPBG34_18J **(22/08/2018 - ...)**
1110	2204 1533 02	1	HOSE	**(21/08/2018 - 21/08/2018)** MODEL:CPBG34_18J **(22/08/2018 - ...)**
1120	0663 7134 00	1	O-RING	**(21/08/2018 - 21/08/2018)** MODEL:CPBG34_18J **(22/08/2018 - ...)**
1130	0147 1325 03	2	HEXAGON HEAD SCREW	**(21/08/2018 - 21/08/2018)** MODEL:CPBG34_18J **(22/08/2018 - ...)**
1140	2202 9045 01	2	WASHER	**(21/08/2018 - 21/08/2018)** MODEL:CPBG34_18J **(22/08/2018 - ...)**
1150	2204 1855 01	1	PIPE	**(21/08/2018 - 21/08/2018)** MODEL:CPBG34_18J **(22/08/2018 - ...)**
1220	2203 0236 00	1	SUPPORT	**(21/08/2018 - 21/08/2018)** MODEL:CPBG34_18J **(22/08/2018 - ...)**
1230	0129 3270 38	4	RIVET	**(21/08/2018 - 21/08/2018)** MODEL:CPBG34_18J **(22/08/2018 - ...)**

Legend:

IDRY:N - Integrated dryer:No
MDVAR:FMOUNTED - Variant:Floor Mounted
MODEL:CPBG34_18J - Model:CPBg 34
MODEL:CPVD34_18J - Model:CPVSd 34

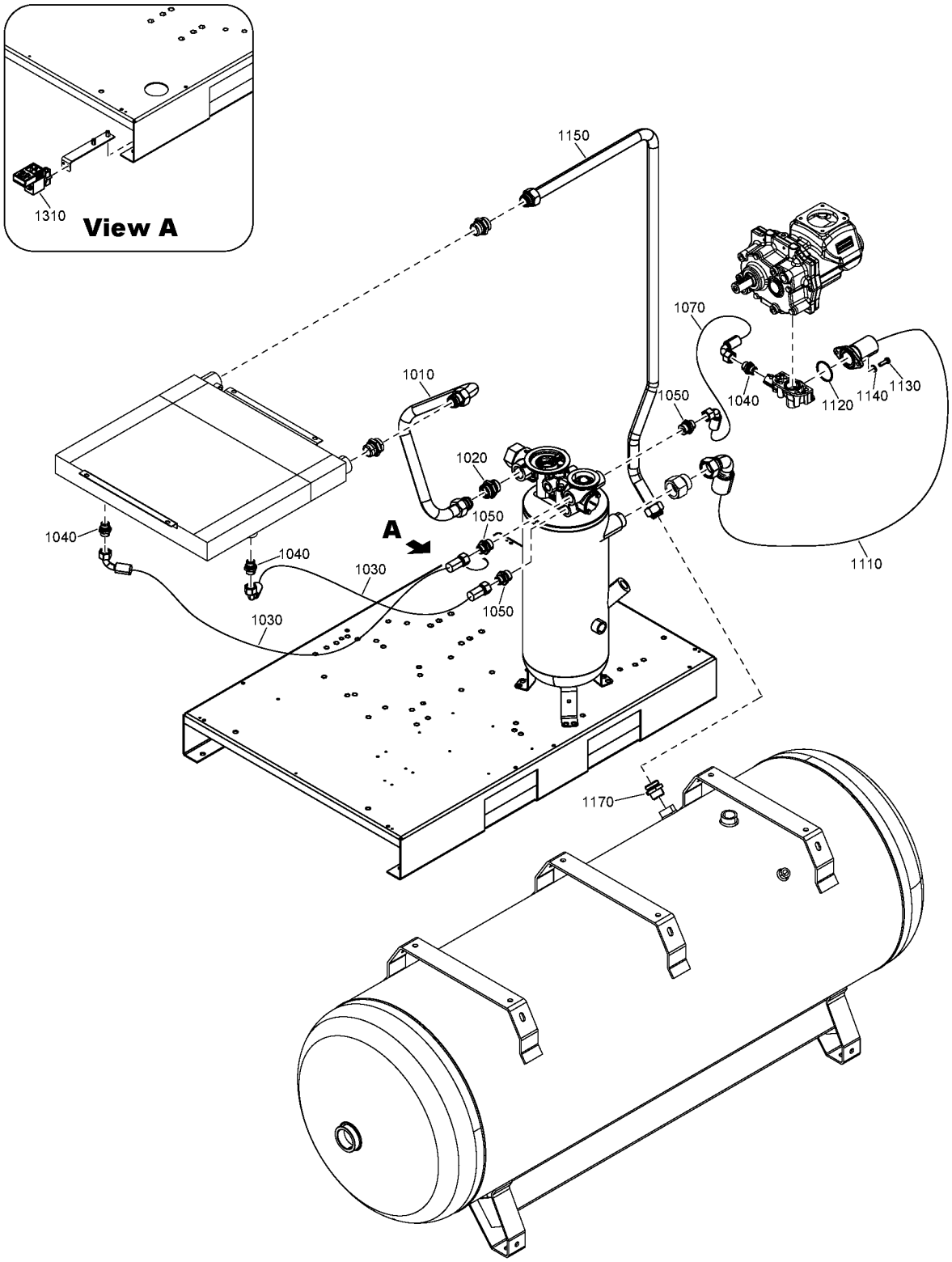
1310
View A
1150
1070
1010
1050
1040
1120
1140
1130
1020
1050
A
1040
1040
1030
1030
1050
1110
1170

17 - Air outlet CPBg 20, CPBg 25, CPVSd 21, CPVSd 25 - Tank-mounted - Without dryer

(MODEL:CPBG20_18J , MODEL:CPBG25_18J , MODEL:CPVD21_18J , MODEL:CPVD25_18J) + IDRY:N + MDVAR:CU

Ref	Part Number	Qty	Name	Validity
1010	2204 1527 00	1	PIPE	**(21/08/2018 - 21/08/2018)** MODEL:CPBG20_18J , MODEL:CPBG25_18J **(22/08/2018 - ...)**
1020	0580 0017 37	1	FITTING PIPE	**(21/08/2018 - 21/08/2018)** MODEL:CPBG20_18J , MODEL:CPBG25_18J **(22/08/2018 - ...)**
1030	2202 9325 01	2	HOSE	**(21/08/2018 - 21/08/2018)** MODEL:CPBG20_18J , MODEL:CPBG25_18J **(22/08/2018 - ...)**
1040	0580 0015 40	3	NIPPLE	**(21/08/2018 - 21/08/2018)** MODEL:CPBG20_18J , MODEL:CPBG25_18J **(22/08/2018 - ...)**
1050	0580 0015 41	3	NIPPLE	**(21/08/2018 - 21/08/2018)** MODEL:CPBG20_18J , MODEL:CPBG25_18J **(22/08/2018 - ...)**
1070	2202 9325 08	1	HOSE	**(21/08/2018 - 21/08/2018)** MODEL:CPBG20_18J , MODEL:CPBG25_18J **(22/08/2018 - ...)**
1110	2204 1713 03	1	HOSE	**(21/08/2018 - 21/08/2018)** MODEL:CPBG20_18J , MODEL:CPBG25_18J **(22/08/2018 - ...)**
1120	0663 7134 00	1	O-RING	**(21/08/2018 - 21/08/2018)** MODEL:CPBG20_18J , MODEL:CPBG25_18J **(22/08/2018 - ...)**
1130	0147 1325 03	2	HEXAGON HEAD SCREW	**(21/08/2018 - 21/08/2018)** MODEL:CPBG20_18J , MODEL:CPBG25_18J **(22/08/2018 - ...)**
1140	2202 9045 01	2	WASHER	**(21/08/2018 - 21/08/2018)** MODEL:CPBG20_18J , MODEL:CPBG25_18J **(22/08/2018 - ...)**
1150	2204 1774 05	1	PIPE	**(21/08/2018 - 21/08/2018)** MODEL:CPBG20_18J , MODEL:CPBG25_18J **(22/08/2018 - ...)**
1170	0580 0018 48	1	PIPE COUPLING	**(21/08/2018 - 21/08/2018)** MODEL:CPBG20_18J , MODEL:CPBG25_18J **(22/08/2018 - ...)**
1310		1	TIMER DRAIN	**(04/10/2018 - ...)**
	• 2200 5996 21	1	TIMER DRAIN	

Legend:

IDRY:N - Integrated dryer:No
MDVAR:CU - Variant:Receiver mounted
MODEL:CPBG20_18J - Model:CPBg 20
MODEL:CPBG25_18J - Model:CPBg 25
MODEL:CPVD21_18J - Model:CPVSd 21
MODEL:CPVD25_18J - Model:CPVSd 25

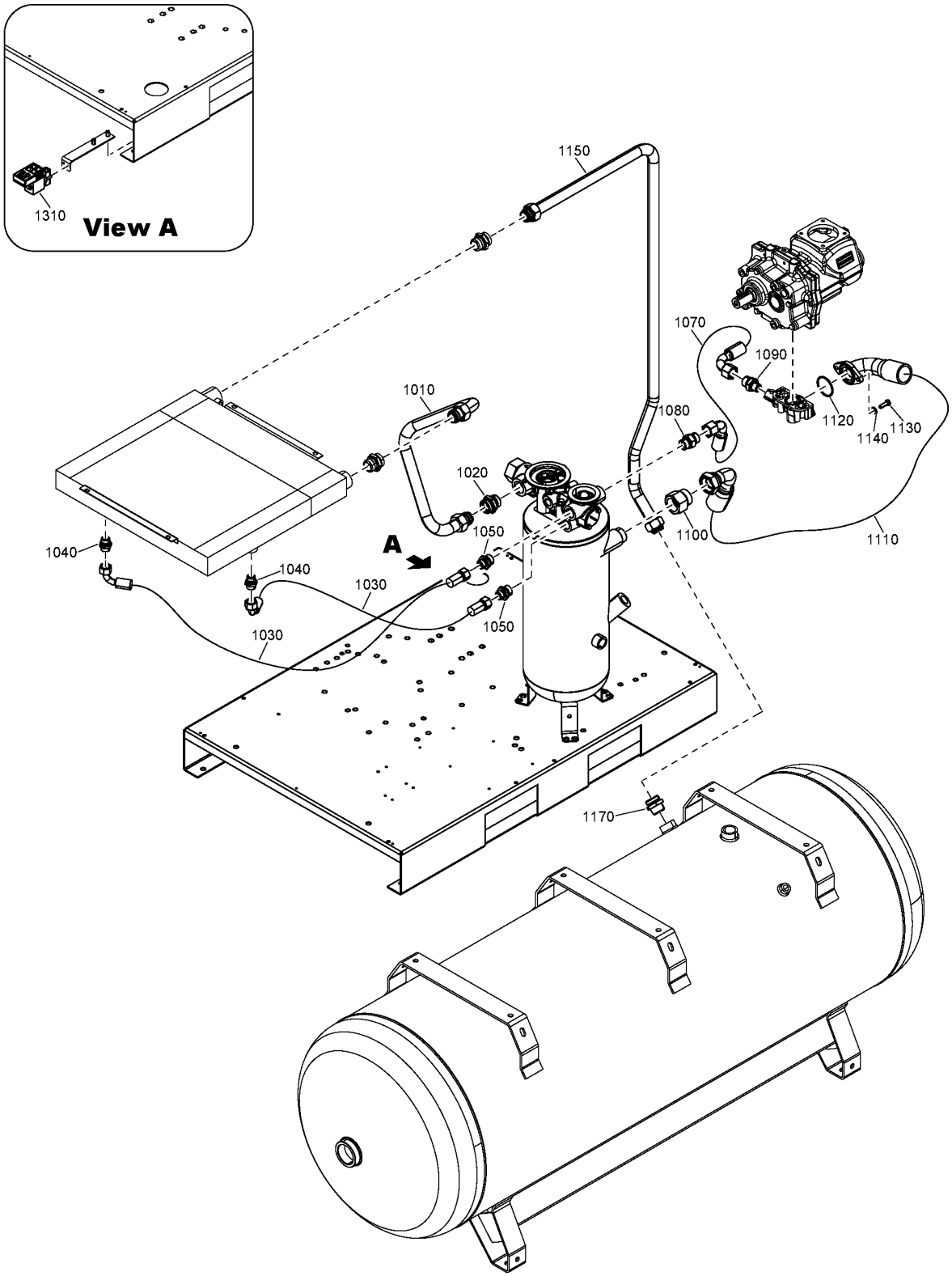
1310
View A
1150
1070
1090
1010
1080
1120
1130
1140
1020
1050
A
1100
1110
1040
1040
1030
1050
1030
1170

Ref	Part Number	Qty	Name	Validity
1010	2204 1527 00	1	PIPE	**(21/08/2018 - 21/08/2018)** MODEL:CPBG29_18J **(22/08/2018 - ...)**
1020	0580 0017 37	1	PIPE FITTING	**(21/08/2018 - 21/08/2018)** MODEL:CPBG29_18J **(22/08/2018 - ...)**
1030	2202 9325 01	2	HOSE	**(21/08/2018 - 21/08/2018)** MODEL:CPBG29_18J **(22/08/2018 - ...)**
1040	0580 0015 40	2	NIPPLE	**(21/08/2018 - 21/08/2018)** MODEL:CPBG29_18J **(22/08/2018 - ...)**
1050	0580 0015 41	2	NIPPLE	**(21/08/2018 - 21/08/2018)** MODEL:CPBG29_18J **(22/08/2018 - ...)**
1070	2202 9325 17	1	HOSE	**(21/08/2018 - 21/08/2018)** MODEL:CPBG29_18J **(22/08/2018 - ...)**
1080	0603 4243 02	1	NIPPLE	**(21/08/2018 - 21/08/2018)** MODEL:CPBG29_18J **(22/08/2018 - ...)**
1090	0603 5522 03	1	NIPPLE	**(21/08/2018 - 21/08/2018)** MODEL:CPBG29_18J **(22/08/2018 - ...)**
1100	2202 9594 01	1	ADAPTER	**(21/08/2018 - 21/08/2018)** MODEL:CPBG29_18J **(22/08/2018 - ...)**
1110	2204 1533 02	1	HOSE	**(21/08/2018 - 21/08/2018)** MODEL:CPBG29_18J **(22/08/2018 - ...)**
1120	0663 7134 00	1	O-RING	**(21/08/2018 - 21/08/2018)** MODEL:CPBG29_18J **(22/08/2018 - ...)**
1130	0147 1325 03	2	HEXAGON HEAD SCREW	**(21/08/2018 - 21/08/2018)** MODEL:CPBG29_18J **(22/08/2018 - ...)**
1140	2202 9045 01	2	WASHER	**(21/08/2018 - 21/08/2018)** MODEL:CPBG29_18J **(22/08/2018 - ...)**
1150	2204 1774 05	1	PIPE	**(21/08/2018 - 21/08/2018)** MODEL:CPBG29_18J **(22/08/2018 - ...)**
1170	0580 0018 48	1	PIPE COUPLING	**(21/08/2018 - 21/08/2018)** MODEL:CPBG29_18J **(22/08/2018 - ...)**
1310		1	TIMER DRAIN	**(04/10/2018 - ...)**
	• 2200 5996 21	1	TIMER DRAIN	
	• ~~2202 2610 18~~	1	TIMER DRAIN CONTROL	
	Substituted by:	1089 9331 07 - TIMER (quantity: 1)		

Legend:

IDRY:N - Integrated dryer:No
MDVAR:CU - Variant:Receiver mounted
MODEL:CPBG29_18J - Model:CPBg 29
MODEL:CPVD29_18J - Model:CPVSd 29

19 - Air outlet CPBg 34, CPVSd 34 - Tank-mounted - Without dryer

(MODEL:CPBG34_18J , MODEL:CPVD34_18J) + IDRY:N + MDVAR:CU

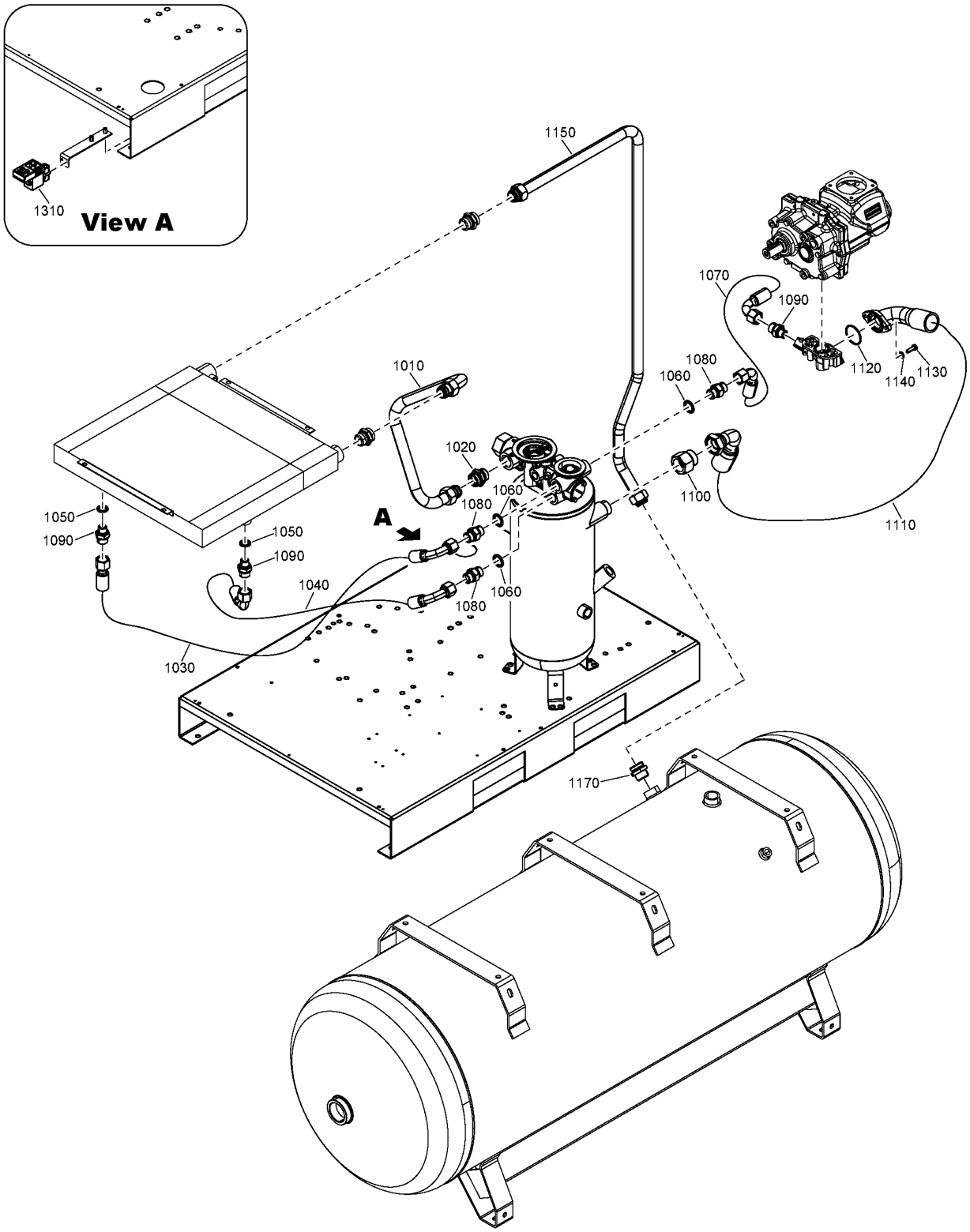

Ref	Part Number	Qty	Name	Validity
1010	2204 1527 00	1	PIPE	**(21/08/2018 - 21/08/2018)** MODEL:CPBG34_18J **(22/08/2018 - ...)**
1020	0580 0017 37	1	FITTING PIPE	**(21/08/2018 - 21/08/2018)** MODEL:CPBG34_18J **(22/08/2018 - ...)**
1030	2202 8681 10	1	HOSE	**(20/11/2018 - ...)**
1040	2202 9325 17	1	HOSE	**(20/11/2018 - ...)**
1050	0661 1000 39	2	SEAL WASHER	**(21/08/2018 - 21/08/2018)** MODEL:CPBG34_18J **(22/08/2018 - ...)**
1060	0661 1000 43	3	SEAL WASHER	**(21/08/2018 - 21/08/2018)** MODEL:CPBG34_18J **(22/08/2018 - ...)**
1070	2202 9325 17	1	HOSE	**(21/08/2018 - 21/08/2018)** MODEL:CPBG34_18J **(22/08/2018 - ...)**
1080	0603 4243 02	3	NIPPLE	**(21/08/2018 - 21/08/2018)** MODEL:CPBG34_18J **(22/08/2018 - ...)**
1090	0603 5522 03	3	NIPPLE	**(21/08/2018 - 21/08/2018)** MODEL:CPBG34_18J **(22/08/2018 - ...)**
1100	2202 9594 01	1	ADAPTER	**(21/08/2018 - 21/08/2018)** MODEL:CPBG34_18J **(22/08/2018 - ...)**
1110	2204 1533 02	1	HOSE	**(21/08/2018 - 21/08/2018)** MODEL:CPBG34_18J **(22/08/2018 - ...)**
1120	0663 7134 00	1	O-RING	**(21/08/2018 - 21/08/2018)** MODEL:CPBG34_18J **(22/08/2018 - ...)**
1130	0147 1325 03	2	HEXAGON HEAD SCREW	**(21/08/2018 - 21/08/2018)** MODEL:CPBG34_18J **(22/08/2018 - ...)**
1140	2202 9045 01	2	WASHER	**(21/08/2018 - 21/08/2018)** MODEL:CPBG34_18J **(22/08/2018 - ...)**
1150	2204 1774 05	1	PIPE	**(21/08/2018 - 21/08/2018)** MODEL:CPBG34_18J **(22/08/2018 - ...)**
1170	0580 0018 48	1	PIPE COUPLING	**(21/08/2018 - 21/08/2018)** MODEL:CPBG34_18J **(22/08/2018 - ...)**
1310		1	TIMER DRAIN	**(04/10/2018 - ...)**
	• 2200 5996 21	1	TIMER DRAIN	
	• ~~2202 2610 18~~	1	TIMER DRAIN CONTROL	
	Substituted by:	1089 9331 07 - TIMER (quantity: 1)		

Legend:

IDRY:N - Integrated dryer:No
MDVAR:CU - Variant:Receiver mounted
MODEL:CPBG34_18J - Model:CPBg 34
MODEL:CPVD34_18J - Model:CPVSd 34

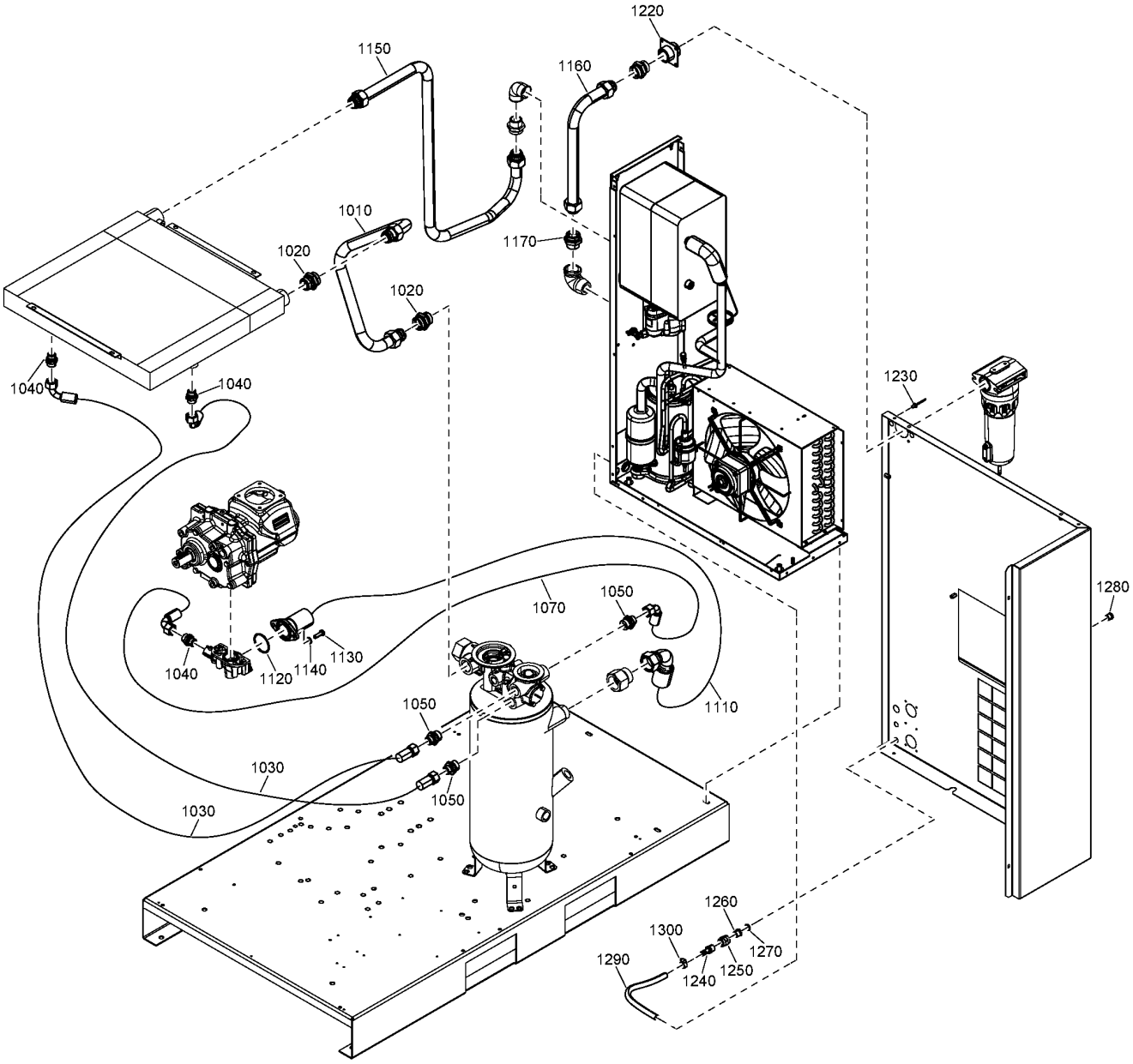
1220
1150
1160
1010
1020
1170
1020
1040
1040
1230
1280
1070
1050
1130
1040
1120
1140
1110
1050
1030
1050
1030
1260
1300
1270
1290
1240
1250

Ref	Part Number	Qty	Name	Validity
1010	2204 1527 00	1	PIPE	**(21/08/2018 - 21/08/2018)** MODEL:CPBG20_18J , MODEL:CPBG25_18J **(22/08/2018 - ...)**
1020	0580 0017 37	2	FITTING PIPE	**(21/08/2018 - 21/08/2018)** MODEL:CPBG20_18J , MODEL:CPBG25_18J **(22/08/2018 - ...)**
1030	2202 9325 01	2	HOSE	**(21/08/2018 - 21/08/2018)** MODEL:CPBG20_18J , MODEL:CPBG25_18J **(22/08/2018 - ...)**
1040	0580 0015 40	3	NIPPLE	**(21/08/2018 - 21/08/2018)** MODEL:CPBG20_18J , MODEL:CPBG25_18J **(22/08/2018 - ...)**
1050	0580 0015 41	3	NIPPLE	**(21/08/2018 - 21/08/2018)** MODEL:CPBG20_18J , MODEL:CPBG25_18J **(22/08/2018 - ...)**
1070	2202 9325 08	1	HOSE	**(21/08/2018 - 21/08/2018)** MODEL:CPBG20_18J , MODEL:CPBG25_18J **(22/08/2018 - ...)**
1110	2204 1713 03	1	HOSE	**(21/08/2018 - 21/08/2018)** MODEL:CPBG20_18J , MODEL:CPBG25_18J **(22/08/2018 - ...)**
1120	0663 7134 00	1	O-RING	**(21/08/2018 - 21/08/2018)** MODEL:CPBG20_18J , MODEL:CPBG25_18J **(22/08/2018 - ...)**
1130	0147 1325 03	2	HEXAGON HEAD SCREW	**(21/08/2018 - 21/08/2018)** MODEL:CPBG20_18J , MODEL:CPBG25_18J **(22/08/2018 - ...)**
1140	2202 9045 01	2	WASHER	**(21/08/2018 - 21/08/2018)** MODEL:CPBG20_18J , MODEL:CPBG25_18J **(22/08/2018 - ...)**
1150	2204 1774 00	1	PIPE	**(21/08/2018 - 21/08/2018)** MODEL:CPBG20_18J , MODEL:CPBG25_18J **(22/08/2018 - ...)**
1160	2204 1774 02	1	PIPE	**(21/08/2018 - 21/08/2018)** MODEL:CPBG20_18J , MODEL:CPBG25_18J **(22/08/2018 - ...)**
1170	0580 0018 48	1	PIPE COUPLING	**(21/08/2018 - 21/08/2018)** MODEL:CPBG20_18J , MODEL:CPBG25_18J **(22/08/2018 - ...)**
1220	2203 0236 00	1	SUPPORT	**(21/08/2018 - 21/08/2018)** MODEL:CPBG20_18J , MODEL:CPBG25_18J **(22/08/2018 - ...)**
1230	0129 3270 38	4	RIVET	**(21/08/2018 - 21/08/2018)** MODEL:CPBG20_18J , MODEL:CPBG25_18J **(22/08/2018 - ...)**
1240	6221 9973 00	1	HOSE	**(21/08/2018 - 21/08/2018)** MODEL:CPBG20_18J , MODEL:CPBG25_18J **(22/08/2018 - ...)**
1250	0607 1150 08	1	SLEEVE	**(08/10/2018 - ...)**
1260	6231 9269 00	1	REDUCTION	**(21/08/2018 - 21/08/2018)** MODEL:CPBG20_18J , MODEL:CPBG25_18J **(22/08/2018 - ...)**
1270	~~6211 6690 00~~	1	JOINT	**(21/08/2018 - 21/08/2018)** MODEL:CPBG20_18J , MODEL:CPBG25_18J **(22/08/2018 - ...)**
	Substituted by:	0653 9056 00 - COPPER WASHER-13X18X1 (quantity: 1)		
1280	6221 9610 00	1	BUSHING	**(21/08/2018 - 21/08/2018)** MODEL:CPBG20_18J , MODEL:CPBG25_18J **(22/08/2018 - ...)**
1290	0070 6002 49	1	PLASTIC TUBE	**(21/08/2018 - 21/08/2018)** MODEL:CPBG20_18J , MODEL:CPBG25_18J **(22/08/2018 - ...)**
1300	0347 6100 52	1	HOSE CLAMP	**(21/08/2018 - 21/08/2018)** MODEL:CPBG20_18J , MODEL:CPBG25_18J **(22/08/2018 - ...)**

Legend:

IDRY:Y - Integrated dryer:Yes
MDVAR:FMOUNTED - Variant:Floor Mounted
MODEL:CPBG20_18J - Model:CPBg 20
MODEL:CPBG25_18J - Model:CPBg 25
MODEL:CPVD21_18J - Model:CPVSd 21
MODEL:CPVD25_18J - Model:CPVSd 25

21 - Air outlet CPBg 29, CPVSd 29 - Floor-mounted - With dryer

(MODEL:CPBG29_18J , MODEL:CPVD29_18J) + IDRY:Y + MDVAR:FMOUNTED

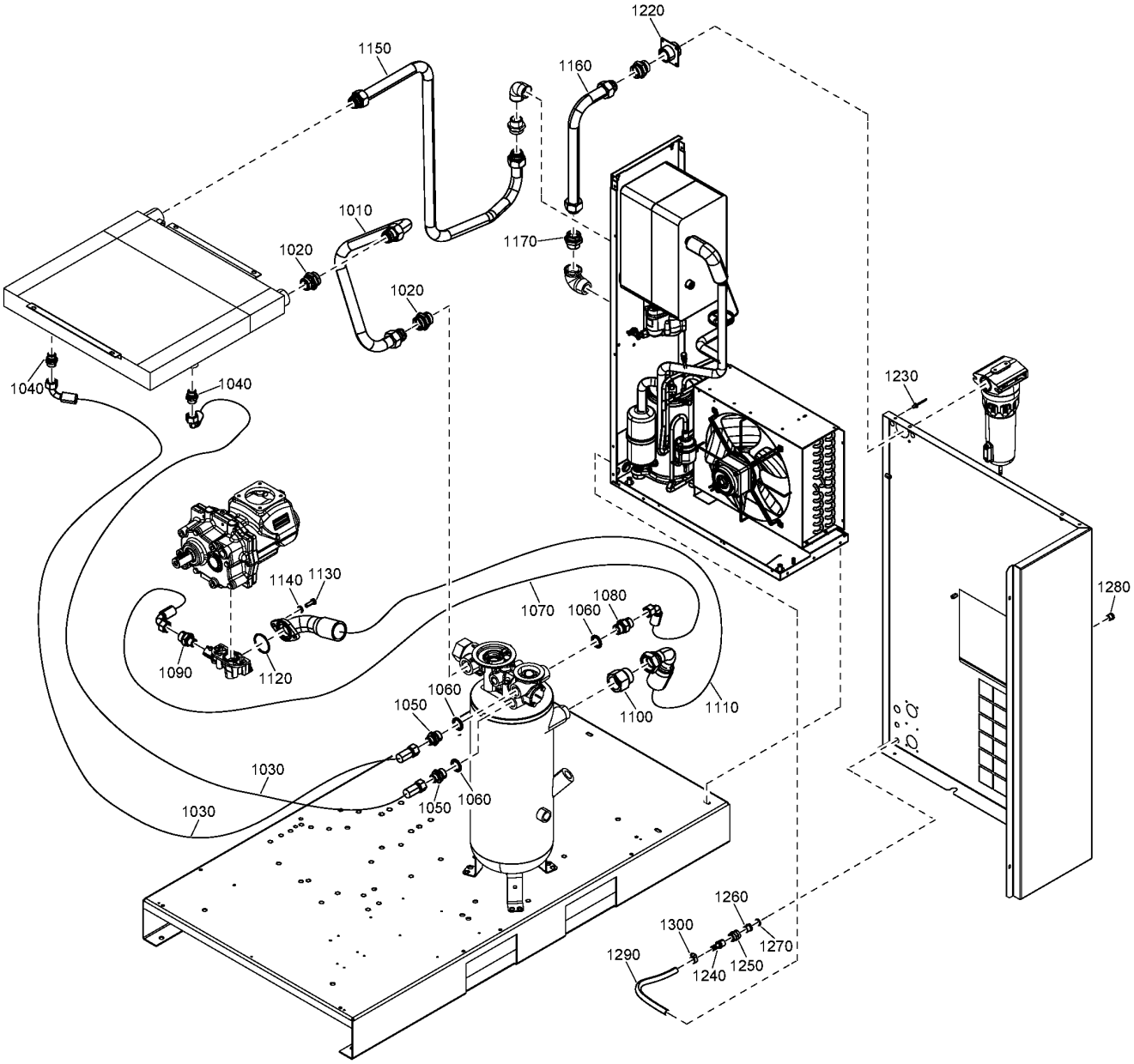

Ref	Part Number	Qty	Name	Validity
1010	2204 1527 00	1	PIPE	**(21/08/2018 - 21/08/2018) (22/08/2018 - ...)** MODEL:CPBG29_18J
1020	0580 0017 37	2	FITTING PIPE	**(21/08/2018 - 21/08/2018) (22/08/2018 - ...)** MODEL:CPBG29_18J
1030	2202 9325 01	2	HOSE	**(21/08/2018 - 21/08/2018) (22/08/2018 - ...)** MODEL:CPBG29_18J
1040	0580 0015 40	2	NIPPLE	**(21/08/2018 - 21/08/2018) (22/08/2018 - ...)** MODEL:CPBG29_18J
1050	0580 0015 41	2	NIPPLE	**(21/08/2018 - 21/08/2018) (22/08/2018 - ...)** MODEL:CPBG29_18J
1060	0661 1000 43	3	SEAL WASHER	**(21/08/2018 - 21/08/2018) (22/08/2018 - ...)** MODEL:CPBG29_18J
1070	2202 9325 17	1	HOSE	**(21/08/2018 - 21/08/2018) (22/08/2018 - ...)** MODEL:CPBG29_18J
1080	0603 4243 02	1	NIPPLE	**(21/08/2018 - 21/08/2018) (22/08/2018 - ...)** MODEL:CPBG29_18J
1090	0603 5522 03	1	NIPPLE	**(21/08/2018 - 21/08/2018) (22/08/2018 - ...)** MODEL:CPBG29_18J
1100	2202 9594 01	1	ADAPTER	**(21/08/2018 - 21/08/2018) (22/08/2018 - ...)** MODEL:CPBG29_18J
1110	2204 1533 02	1	HOSE	**(21/08/2018 - 21/08/2018) (22/08/2018 - ...)** MODEL:CPBG29_18J
1120	0663 7134 00	1	O-RING	**(21/08/2018 - 21/08/2018) (22/08/2018 - ...)** MODEL:CPBG29_18J
1130	0147 1325 03	2	HEXAGON HEAD SCREW	**(21/08/2018 - 21/08/2018) (22/08/2018 - ...)** MODEL:CPBG29_18J
1140	2202 9045 01	2	WASHER	**(21/08/2018 - 21/08/2018) (22/08/2018 - ...)** MODEL:CPBG29_18J
1150	2204 1774 00	1	PIPE	**(21/08/2018 - 21/08/2018) (22/08/2018 - ...)** MODEL:CPBG29_18J
1160	2204 1774 02	1	PIPE	**(21/08/2018 - 21/08/2018) (22/08/2018 - ...)** MODEL:CPBG29_18J
1170	0580 0018 48	1	PIPE COUPLING	**(21/08/2018 - 21/08/2018) (22/08/2018 - ...)** MODEL:CPBG29_18J
1220	2203 0236 00	1	SUPPORT	**(21/08/2018 - 21/08/2018) (22/08/2018 - ...)** MODEL:CPBG29_18J
1230	0129 3270 38	4	RIVET	**(21/08/2018 - 21/08/2018) (22/08/2018 - ...)** MODEL:CPBG29_18J
1240	6221 9973 00	1	HOSE	**(21/08/2018 - 21/08/2018) (22/08/2018 - ...)** MODEL:CPBG29_18J
1250	0607 1150 08	1	SLEEVE	**(08/10/2018 - ...)**
1260	6231 9269 00	1	REDUCTION	**(21/08/2018 - 21/08/2018) (22/08/2018 - ...)** MODEL:CPBG29_18J
1270	~~6211 6690 00~~	1	JOINT	**(21/08/2018 - 21/08/2018) (22/08/2018 - ...)** MODEL:CPBG29_18J
	Substituted by:	0653 9056 00 - COPPER WASHER-13X18X1 (quantity: 1)		
1280	6221 9610 00	1	BUSHING	**(21/08/2018 - 21/08/2018) (22/08/2018 - ...)** MODEL:CPBG29_18J
1290	0070 6002 49	1	PLASTIC TUBE	**(21/08/2018 - 21/08/2018) (22/08/2018 - ...)** MODEL:CPBG29_18J
1300	0347 6100 52	1	HOSE CLAMP	**(21/08/2018 - 21/08/2018) (22/08/2018 - ...)** MODEL:CPBG29_18J

Legend:

IDRY:Y - Integrated dryer:Yes
MDVAR:FMOUNTED - Variant:Floor Mounted
MODEL:CPBG29_18J - Model:CPBg 29
MODEL:CPVD29_18J - Model:CPVSd 29

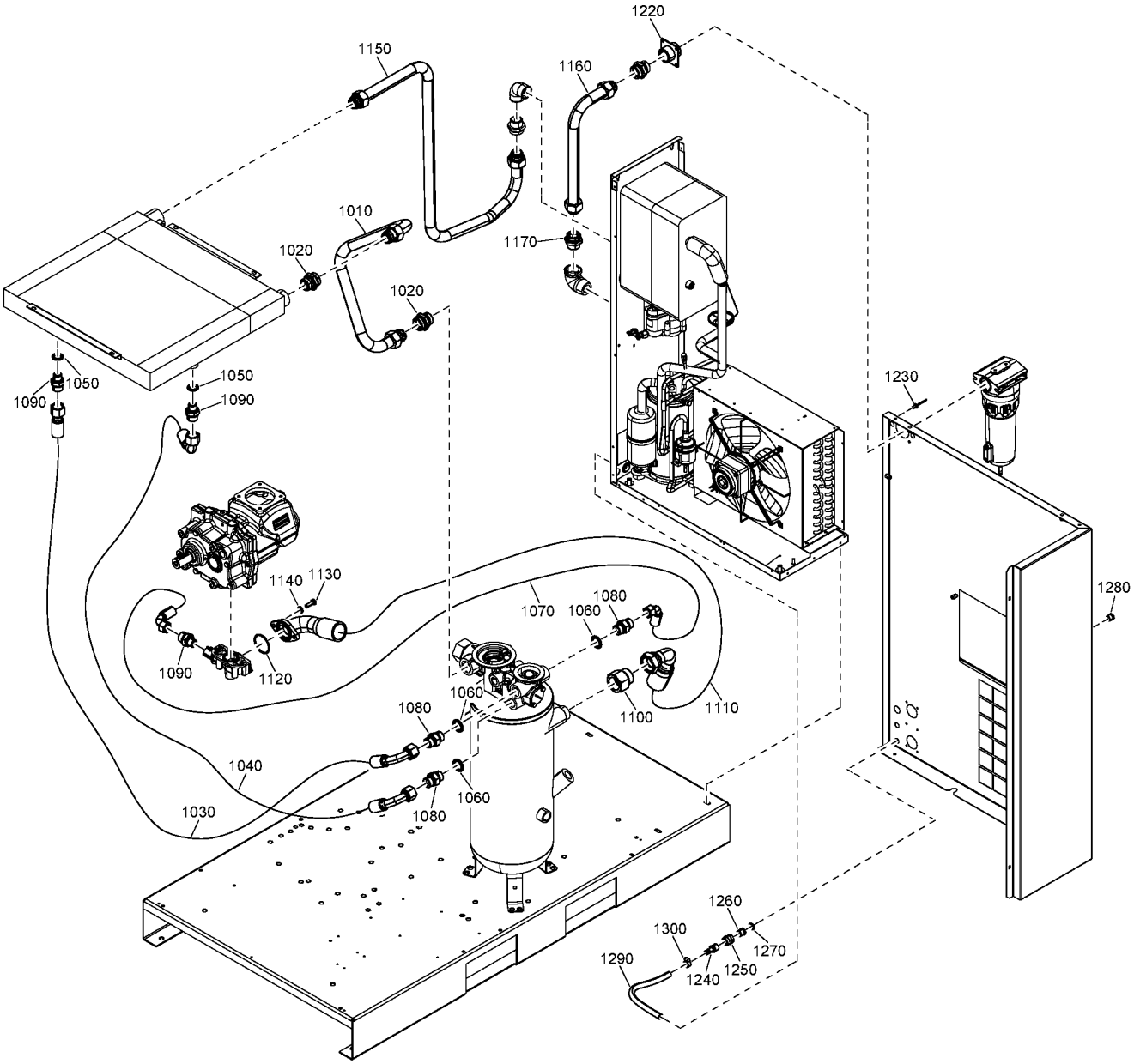
1220
1150
1160
1010
1020
1170
1020
1050
1090
1050
1090
1230
1140
1130
1070
1060
1080
1280
1090
1120
1060
1080
1100
1110
1040
1060
1030
1080
1260
1300
1270
1290
1240
1250

Ref	Part Number	Qty	Name	Validity
1010	2204 1527 00	1	PIPE	**(21/08/2018 - 21/08/2018)** MODEL:CPBG34_18J **(22/08/2018 - ...)**
1020	0580 0017 37	2	FITTING PIPE	**(21/08/2018 - 21/08/2018)** MODEL:CPBG34_18J **(22/08/2018 - ...)**
1030	2202 8681 10	1	HOSE	**(20/11/2018 - ...)**
1040	2202 9325 17	1	HOSE	**(20/11/2018 - ...)**
1050	0661 1000 39	2	SEAL WASHER	**(21/08/2018 - 21/08/2018)** MODEL:CPBG34_18J **(22/08/2018 - ...)**
1060	0661 1000 43	3	SEAL WASHER	**(21/08/2018 - 21/08/2018)** MODEL:CPBG34_18J **(22/08/2018 - ...)**
1070	2202 9325 17	1	HOSE	**(21/08/2018 - 21/08/2018)** MODEL:CPBG34_18J **(22/08/2018 - ...)**
1080	0603 4243 02	3	NIPPLE	**(21/08/2018 - 21/08/2018)** MODEL:CPBG34_18J **(22/08/2018 - ...)**
1090	0603 5522 03	3	NIPPLE	**(21/08/2018 - 21/08/2018)** MODEL:CPBG34_18J **(22/08/2018 - ...)**
1100	2202 9594 01	1	ADAPTER	**(21/08/2018 - 21/08/2018)** MODEL:CPBG34_18J **(22/08/2018 - ...)**
1110	2204 1533 02	1	HOSE	**(21/08/2018 - 21/08/2018)** MODEL:CPBG34_18J **(22/08/2018 - ...)**
1120	0663 7134 00	1	O-RING	**(21/08/2018 - 21/08/2018)** MODEL:CPBG34_18J **(22/08/2018 - ...)**
1130	0147 1325 03	2	HEXAGON HEAD SCREW	**(21/08/2018 - 21/08/2018)** MODEL:CPBG34_18J **(22/08/2018 - ...)**
1140	2202 9045 01	2	WASHER	**(21/08/2018 - 21/08/2018)** MODEL:CPBG34_18J **(22/08/2018 - ...)**
1150	2204 1774 00	1	PIPE	**(21/08/2018 - 21/08/2018)** MODEL:CPBG34_18J **(22/08/2018 - ...)**
1160	2204 1774 02	1	PIPE	**(21/08/2018 - 21/08/2018)** MODEL:CPBG34_18J **(22/08/2018 - ...)**
1170	0580 0018 48	1	PIPE COUPLING	**(21/08/2018 - 21/08/2018)** MODEL:CPBG34_18J **(22/08/2018 - ...)**
1220	2203 0236 00	1	SUPPORT	**(21/08/2018 - 21/08/2018)** MODEL:CPBG34_18J **(22/08/2018 - ...)**
1230	0129 3270 38	4	RIVET	**(21/08/2018 - 21/08/2018)** MODEL:CPBG34_18J **(22/08/2018 - ...)**
1240	6221 9973 00	1	HOSE	**(21/08/2018 - 21/08/2018)** MODEL:CPBG34_18J **(22/08/2018 - ...)**
1250	0607 1150 08	1	SLEEVE	**(08/10/2018 - ...)**
1260	6231 9269 00	1	REDUCTION	**(21/08/2018 - 21/08/2018)** MODEL:CPBG34_18J **(22/08/2018 - ...)**
1270	~~6211 6690 00~~	1	JOINT	**(21/08/2018 - 21/08/2018)** MODEL:CPBG34_18J **(22/08/2018 - ...)**
	Substituted by:	0653 9056 00 - COPPER WASHER-13X18X1 (quantity: 1)		
1280	6221 9610 00	1	BUSHING	**(21/08/2018 - 21/08/2018)** MODEL:CPBG34_18J **(22/08/2018 - ...)**
1290	0070 6002 49	1	PLASTIC TUBE	**(21/08/2018 - 21/08/2018)** MODEL:CPBG34_18J **(22/08/2018 - ...)**
1300	0347 6100 52	1	HOSE CLAMP	**(21/08/2018 - 21/08/2018)** MODEL:CPBG34_18J **(22/08/2018 - ...)**

Legend:
IDRY:Y - Integrated dryer:Yes
MDVAR:FMOUNTED - Variant:Floor Mounted
MODEL:CPBG34_18J - Model:CPBg 34
MODEL:CPVD34_18J - Model:CPVSd 34

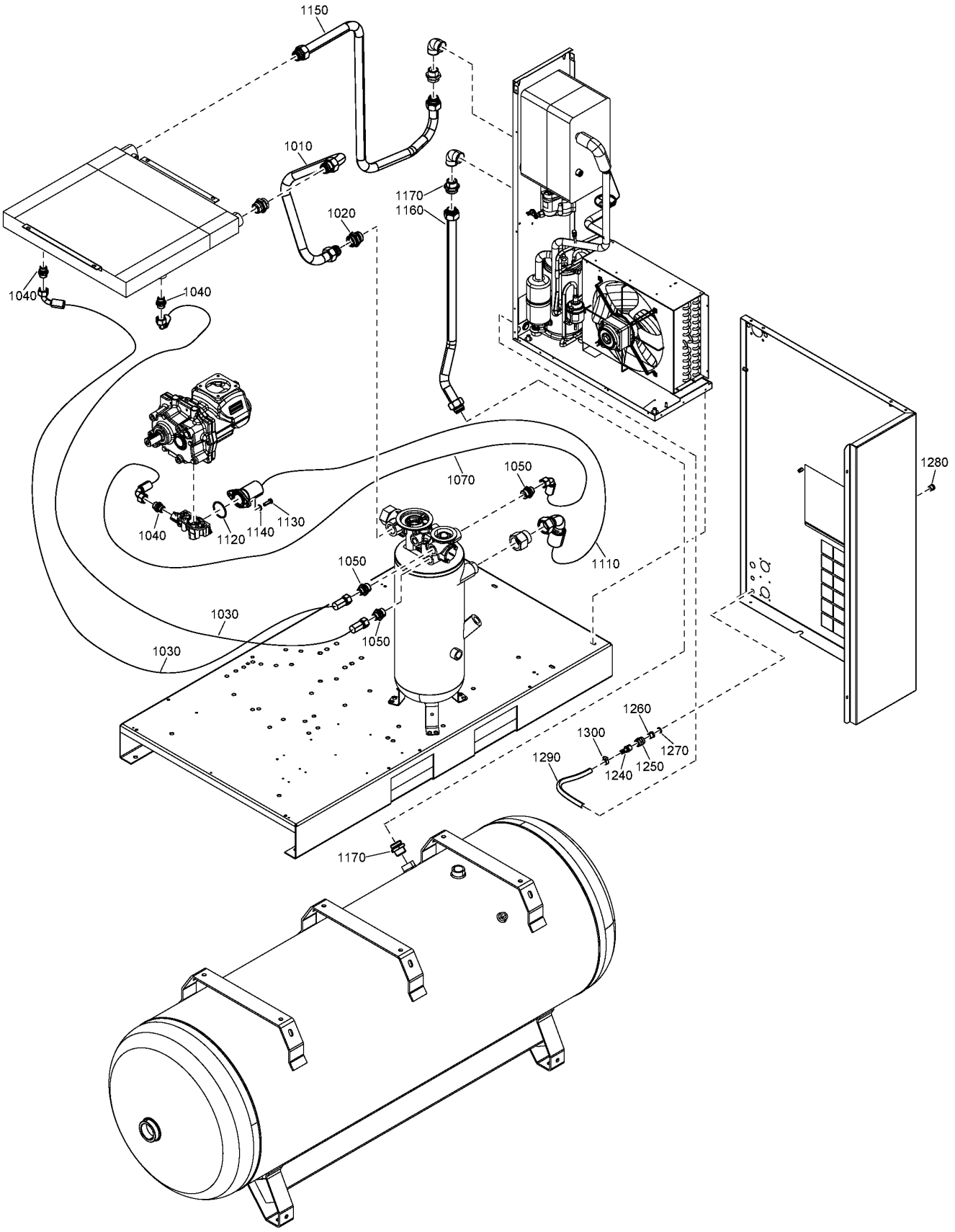
1150
1010
1020
1170
1160
1040
1040
1070
1050
1130
1040
1120
1140
1110
1050
1030
1050
1030
1280
1260
1300
1270
1290
1250
1240
1170

Ref	Part Number	Qty	Name	Validity
1010	2204 1527 00	1	PIPE	**(21/08/2018 - 21/08/2018)** MODEL:CPBG20_18J , MODEL:CPBG25_18J **(22/08/2018 - ...)**
1020	0580 0017 37	1	FITTING PIPE	**(21/08/2018 - 21/08/2018)** MODEL:CPBG20_18J , MODEL:CPBG25_18J **(22/08/2018 - ...)**
1030	2202 9325 01	2	HOSE	**(21/08/2018 - 21/08/2018)** MODEL:CPBG20_18J , MODEL:CPBG25_18J **(22/08/2018 - ...)**
1040	0580 0015 40	3	NIPPLE	**(21/08/2018 - 21/08/2018)** MODEL:CPBG20_18J , MODEL:CPBG25_18J **(22/08/2018 - ...)**
1050	0580 0015 41	3	NIPPLE	**(21/08/2018 - 21/08/2018)** MODEL:CPBG20_18J , MODEL:CPBG25_18J **(22/08/2018 - ...)**
1070	2202 9325 08	1	HOSE	**(21/08/2018 - 21/08/2018)** MODEL:CPBG20_18J , MODEL:CPBG25_18J **(22/08/2018 - ...)**
1110	2204 1713 03	1	HOSE	**(21/08/2018 - 21/08/2018)** MODEL:CPBG20_18J , MODEL:CPBG25_18J **(22/08/2018 - ...)**
1120	0663 7134 00	1	O-RING	**(21/08/2018 - 21/08/2018)** MODEL:CPBG20_18J , MODEL:CPBG25_18J **(22/08/2018 - ...)**
1130	0147 1325 03	2	HEXAGON HEAD SCREW	**(21/08/2018 - 21/08/2018)** MODEL:CPBG20_18J , MODEL:CPBG25_18J **(22/08/2018 - ...)**
1140	2202 9045 01	2	WASHER	**(21/08/2018 - 21/08/2018)** MODEL:CPBG20_18J , MODEL:CPBG25_18J **(22/08/2018 - ...)**
1150	2204 1774 00	1	PIPE	**(21/08/2018 - 21/08/2018)** MODEL:CPBG20_18J , MODEL:CPBG25_18J **(22/08/2018 - ...)**
1160	2204 1774 04	1	PIPE	**(21/08/2018 - 21/08/2018)** MODEL:CPBG20_18J , MODEL:CPBG25_18J **(22/08/2018 - ...)**
1170	0580 0018 48	2	PIPE COUPLING	**(21/08/2018 - 21/08/2018)** MODEL:CPBG20_18J , MODEL:CPBG25_18J **(22/08/2018 - ...)**
1240	6221 9973 00	1	NOZZLE	**(21/08/2018 - 21/08/2018)** MODEL:CPBG20_18J , MODEL:CPBG25_18J **(22/08/2018 - ...)**
1250	0607 1150 08	1	SLEEVE	**(08/10/2018 - ...)**
1260	6231 9269 00	1	REDUCTION	**(21/08/2018 - 21/08/2018)** MODEL:CPBG20_18J , MODEL:CPBG25_18J **(22/08/2018 - ...)**
1270	~~6211 6690 00~~	1	JOINT	**(21/08/2018 - 21/08/2018)** MODEL:CPBG20_18J , MODEL:CPBG25_18J **(22/08/2018 - ...)**
	Substituted by:	0653 9056 00 - COPPER WASHER-13X18X1 (quantity: 1)		
1280	6221 9610 00	1	BUSHING	**(21/08/2018 - 21/08/2018)** MODEL:CPBG20_18J , MODEL:CPBG25_18J **(22/08/2018 - ...)**
1290	0070 6002 49	1	PLASTIC TUBE	**(21/08/2018 - 21/08/2018)** MODEL:CPBG20_18J , MODEL:CPBG25_18J **(22/08/2018 - ...)**
1300	0347 6100 52	1	HOSE CLAMP	**(21/08/2018 - 21/08/2018)** MODEL:CPBG20_18J , MODEL:CPBG25_18J **(22/08/2018 - ...)**

Legend:

IDRY:Y - Integrated dryer:Yes
MDVAR:CU - Variant:Receiver mounted
MODEL:CPBG20_18J - Model:CPBg 20
MODEL:CPBG25_18J - Model:CPBg 25
MODEL:CPVD21_18J - Model:CPVSd 21
MODEL:CPVD25_18J - Model:CPVSd 25

24 - Air outlet CPBg 29, CPVSd 29 - Tank-mounted - With dryer

(MODEL:CPBG29_18J , MODEL:CPVD29_18J) + IDRY:Y + MDVAR:CU

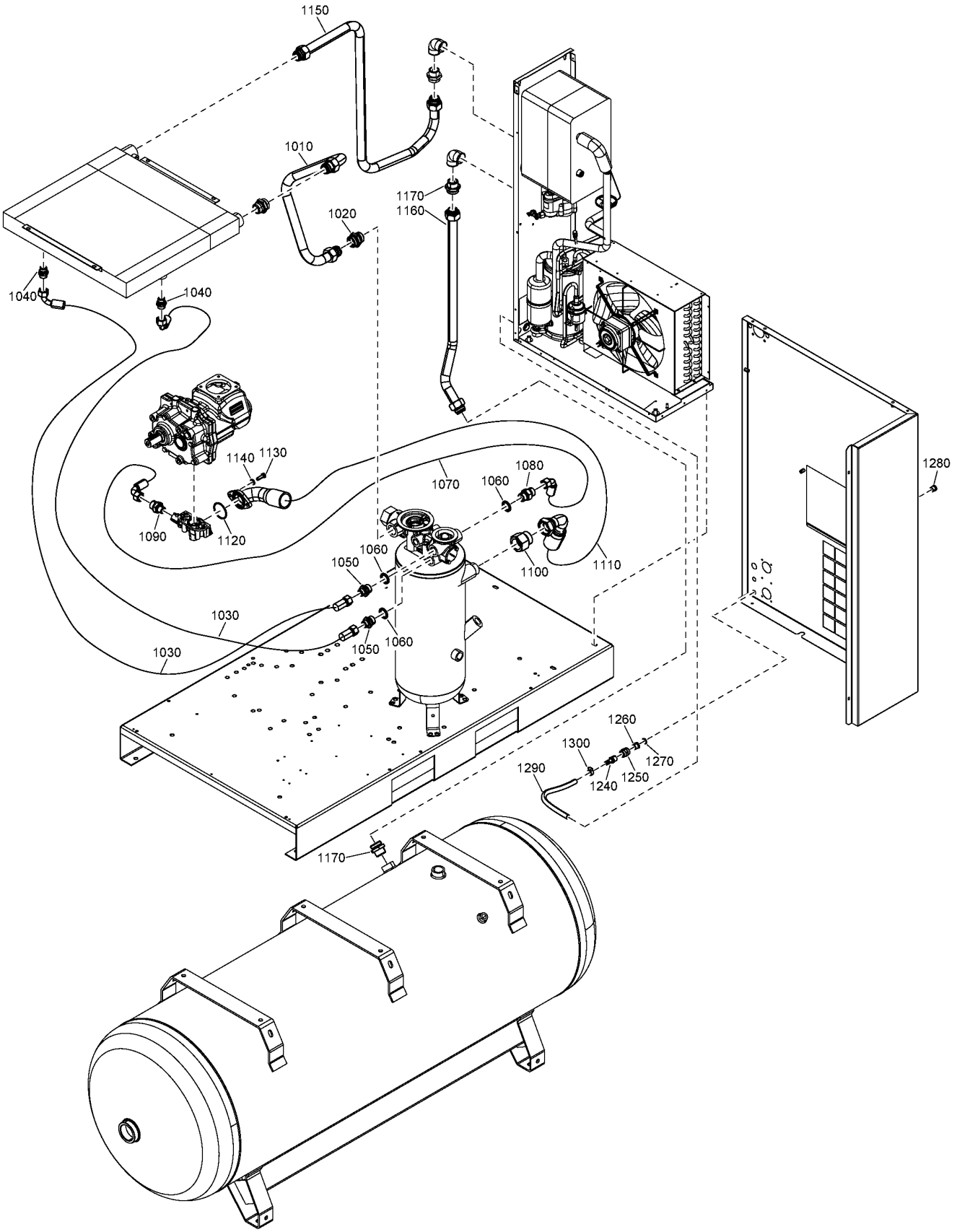

Ref	Part Number	Qty	Name	Validity
1010	2204 1527 00	1	PIPE	**(21/08/2018 - 21/08/2018)** MODEL:CPBG29_18J **(22/08/2018 - ...)**
1020	0580 0017 37	1	FITTING PIPE	**(21/08/2018 - 21/08/2018)** MODEL:CPBG29_18J **(22/08/2018 - ...)**
1030	2202 9325 01	2	HOSE	**(21/08/2018 - 21/08/2018)** MODEL:CPBG29_18J **(22/08/2018 - ...)**
1040	0580 0015 40	2	NIPPLE	**(21/08/2018 - 21/08/2018)** MODEL:CPBG29_18J **(22/08/2018 - ...)**
1050	0580 0015 41	2	NIPPLE	**(21/08/2018 - 21/08/2018)** MODEL:CPBG29_18J **(22/08/2018 - ...)**
1060	0661 1000 43	3	SEAL WASHER	**(21/08/2018 - 21/08/2018)** MODEL:CPBG29_18J **(22/08/2018 - ...)**
1070	2202 9325 17	1	HOSE	**(21/08/2018 - 21/08/2018)** MODEL:CPBG29_18J **(22/08/2018 - ...)**
1080	0603 4243 02	1	NIPPLE	**(21/08/2018 - 21/08/2018)** MODEL:CPBG29_18J **(22/08/2018 - ...)**
1090	0603 5522 03	1	NIPPLE	**(21/08/2018 - 21/08/2018)** MODEL:CPBG29_18J **(22/08/2018 - ...)**
1100	2202 9594 01	1	ADAPTER	**(21/08/2018 - 21/08/2018)** MODEL:CPBG29_18J **(22/08/2018 - ...)**
1110	2204 1533 02	1	HOSE	**(21/08/2018 - 21/08/2018)** MODEL:CPBG29_18J **(22/08/2018 - ...)**
1120	0663 7134 00	1	O-RING	**(21/08/2018 - 21/08/2018)** MODEL:CPBG29_18J **(22/08/2018 - ...)**
1130	0147 1325 03	2	HEXAGON HEAD SCREW	**(21/08/2018 - 21/08/2018)** MODEL:CPBG29_18J **(22/08/2018 - ...)**
1140	2202 9045 01	2	WASHER	**(21/08/2018 - 21/08/2018)** MODEL:CPBG29_18J **(22/08/2018 - ...)**
1150	2204 1774 00	1	PIPE	**(21/08/2018 - 21/08/2018)** MODEL:CPBG29_18J **(22/08/2018 - ...)**
1160	2204 1774 04	1	PIPE	**(21/08/2018 - 21/08/2018)** MODEL:CPBG29_18J **(22/08/2018 - ...)**
1170	0580 0018 48	2	PIPE COUPLING	**(21/08/2018 - 21/08/2018)** MODEL:CPBG29_18J **(22/08/2018 - ...)**
1240	6221 9973 00	1	NOZZLE	**(21/08/2018 - 21/08/2018)** MODEL:CPBG29_18J **(22/08/2018 - ...)**
1250	0607 1150 08	1	SLEEVE	**(08/10/2018 - ...)**
1260	6231 9269 00	1	REDUCTION	**(21/08/2018 - 21/08/2018)** MODEL:CPBG29_18J **(22/08/2018 - ...)**
1270	~~6211 6690 00~~	1	JOINT	**(21/08/2018 - 21/08/2018)** MODEL:CPBG29_18J **(22/08/2018 - ...)**
	Substituted by:	0653 9056 00 - COPPER WASHER-13X18X1 (quantity: 1)		
1280	6221 9610 00	1	BUSHING	**(21/08/2018 - 21/08/2018)** MODEL:CPBG29_18J **(22/08/2018 - ...)**
1290	0070 6002 49	1	PLASTIC TUBE	**(21/08/2018 - 21/08/2018)** MODEL:CPBG29_18J **(22/08/2018 - ...)**
1300	0347 6100 52	1	HOSE CLAMP	**(21/08/2018 - 21/08/2018)** MODEL:CPBG29_18J **(22/08/2018 - ...)**

Legend:

IDRY:Y - Integrated dryer:Yes
MDVAR:CU - Variant:Receiver mounted
MODEL:CPBG29_18J - Model:CPBg 29
MODEL:CPVD29_18J - Model:CPVSd 29

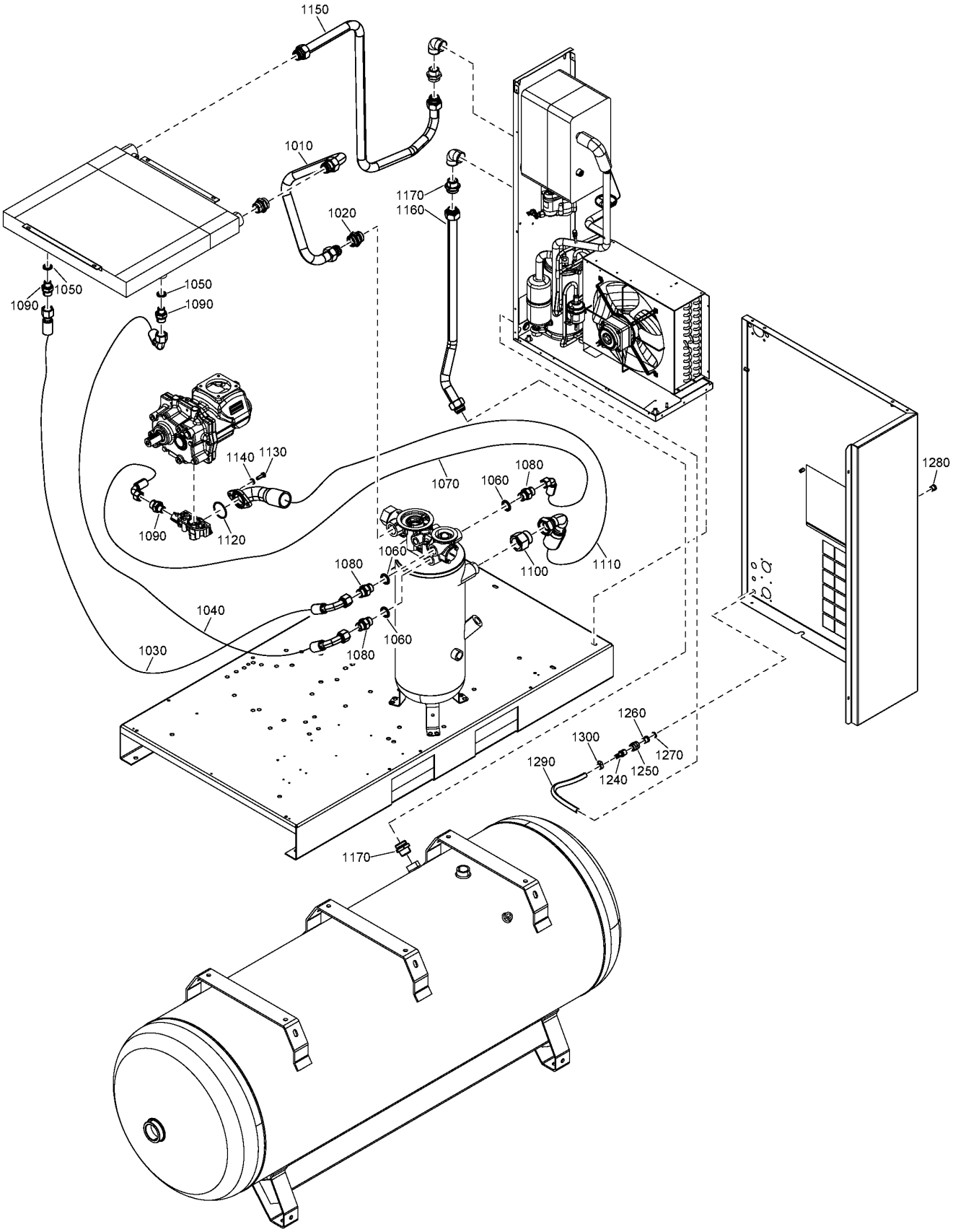
1150
1010
1020
1170
1160
1050
1090
1050
1090
1140
1130
1090
1120
1070
1060
1080
1060
1080
1100
1110
1280
1040
1030
1080
1060
1260
1300
1270
1290
1240
1250
1170

Ref	Part Number	Qty	Name	Validity
1010	2204 1527 00	1	PIPE	**(21/08/2018 - 21/08/2018)** MODEL:CPBG34_18J **(22/08/2018 - ...)**
1020	0580 0017 37	1	FITTING PIPE	**(21/08/2018 - 21/08/2018)** MODEL:CPBG34_18J **(22/08/2018 - ...)**
1030	2202 8681 10	1	HOSE	**(20/11/2018 - ...)**
1040	2202 9325 17	1	HOSE	**(20/11/2018 - ...)**
1050	0661 1000 39	2	SEAL WASHER	**(21/08/2018 - 21/08/2018)** MODEL:CPBG34_18J **(22/08/2018 - ...)**
1060	0661 1000 43	3	SEAL WASHER	**(21/08/2018 - 21/08/2018)** MODEL:CPBG34_18J **(22/08/2018 - ...)**
1070	2202 9325 17	1	HOSE	**(21/08/2018 - 21/08/2018)** MODEL:CPBG34_18J **(22/08/2018 - ...)**
1080	0603 4243 02	3	NIPPLE	**(21/08/2018 - 21/08/2018)** MODEL:CPBG34_18J **(22/08/2018 - ...)**
1090	0603 5522 03	3	NIPPLE	**(21/08/2018 - 21/08/2018)** MODEL:CPBG34_18J **(22/08/2018 - ...)**
1100	2202 9594 01	1	ADAPTER	**(21/08/2018 - 21/08/2018)** MODEL:CPBG34_18J **(22/08/2018 - ...)**
1110	2204 1533 02	1	HOSE	**(21/08/2018 - 21/08/2018)** MODEL:CPBG34_18J **(22/08/2018 - ...)**
1120	0663 7134 00	1	O-RING	**(21/08/2018 - 21/08/2018)** MODEL:CPBG34_18J **(22/08/2018 - ...)**
1130	0147 1325 03	2	HEXAGON HEAD SCREW	**(21/08/2018 - 21/08/2018)** MODEL:CPBG34_18J **(22/08/2018 - ...)**
1140	2202 9045 01	2	WASHER	**(21/08/2018 - 21/08/2018)** MODEL:CPBG34_18J **(22/08/2018 - ...)**
1150	2204 1774 00	1	PIPE	**(21/08/2018 - 21/08/2018)** MODEL:CPBG34_18J **(22/08/2018 - ...)**
1160	2204 1774 04	1	PIPE	**(21/08/2018 - 21/08/2018)** MODEL:CPBG34_18J **(22/08/2018 - ...)**
1170	0580 0018 48	2	PIPE COUPLING	**(21/08/2018 - 21/08/2018)** MODEL:CPBG34_18J **(22/08/2018 - ...)**
1240	6221 9973 00	1	NOZZLE	**(21/08/2018 - 21/08/2018)** MODEL:CPBG34_18J **(22/08/2018 - ...)**
1250	0607 1150 08	1	SLEEVE	**(08/10/2018 - ...)**
1260	6231 9269 00	1	REDUCTION	**(21/08/2018 - 21/08/2018)** MODEL:CPBG34_18J **(22/08/2018 - ...)**
1270	~~6211 6690 00~~	1	JOINT	**(21/08/2018 - 21/08/2018)** MODEL:CPBG34_18J **(22/08/2018 - ...)**
	Substituted by:	0653 9056 00 - COPPER WASHER-13X18X1 (quantity: 1)		
1280	6221 9610 00	1	BUSHING	**(21/08/2018 - 21/08/2018)** MODEL:CPBG34_18J **(22/08/2018 - ...)**
1290	0070 6002 49	1	PLASTIC TUBE	**(21/08/2018 - 21/08/2018)** MODEL:CPBG34_18J **(22/08/2018 - ...)**
1300	0347 6100 52	1	HOSE CLAMP	**(21/08/2018 - 21/08/2018)** MODEL:CPBG34_18J **(22/08/2018 - ...)**

Legend:

IDRY:Y - Integrated dryer:Yes
MDVAR:CU - Variant:Receiver mounted
MODEL:CPBG34_18J - Model:CPBg 34
MODEL:CPVD34_18J - Model:CPVSd 34

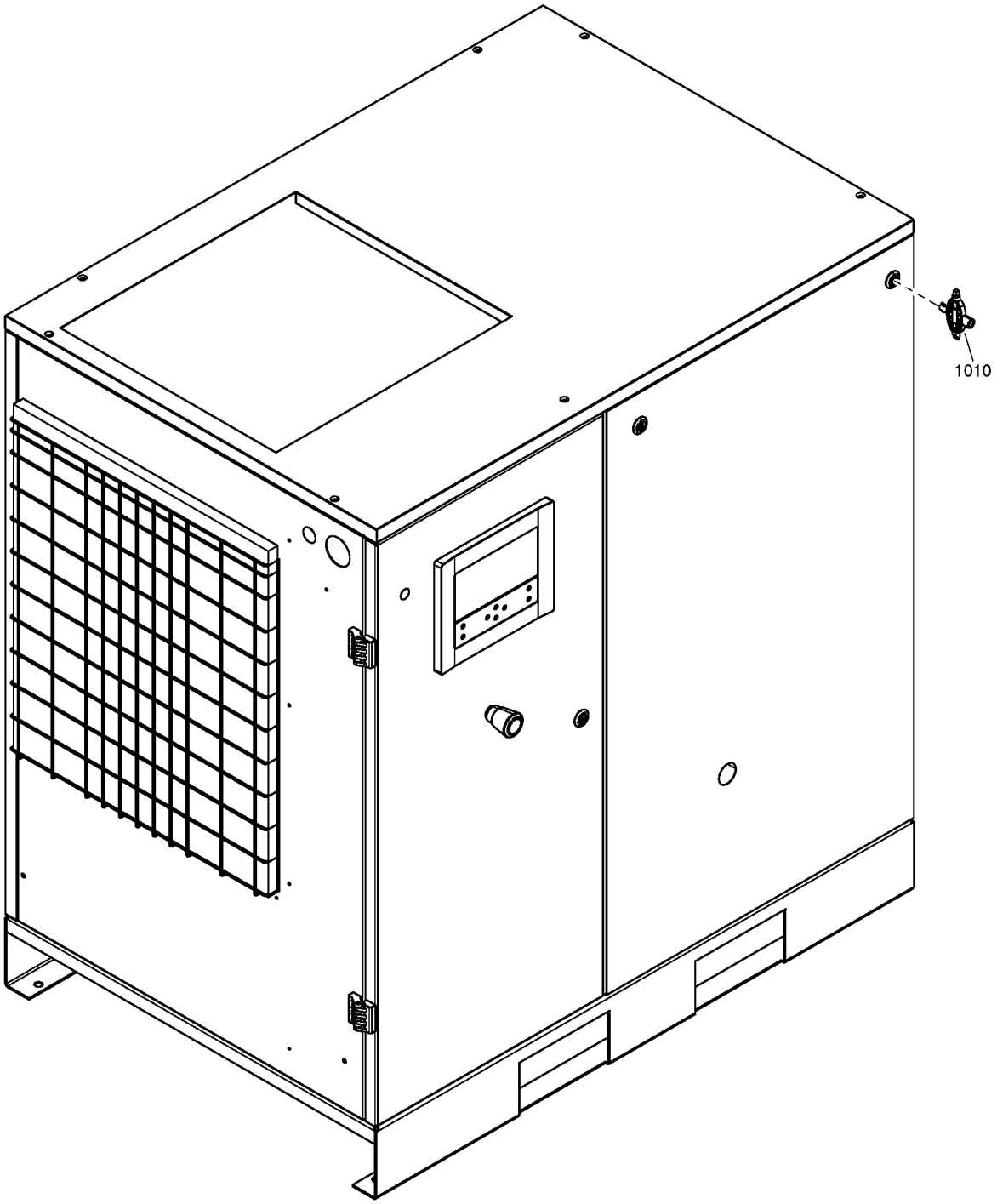
1010

Ref	Part Number	Qty	Name	Validity
1010	6215 4359 00	1	UNIVERSAL KEY	**(21/08/2018 - ...)**

Legend:
EAPPR:IEC - Electrical approval:IEC

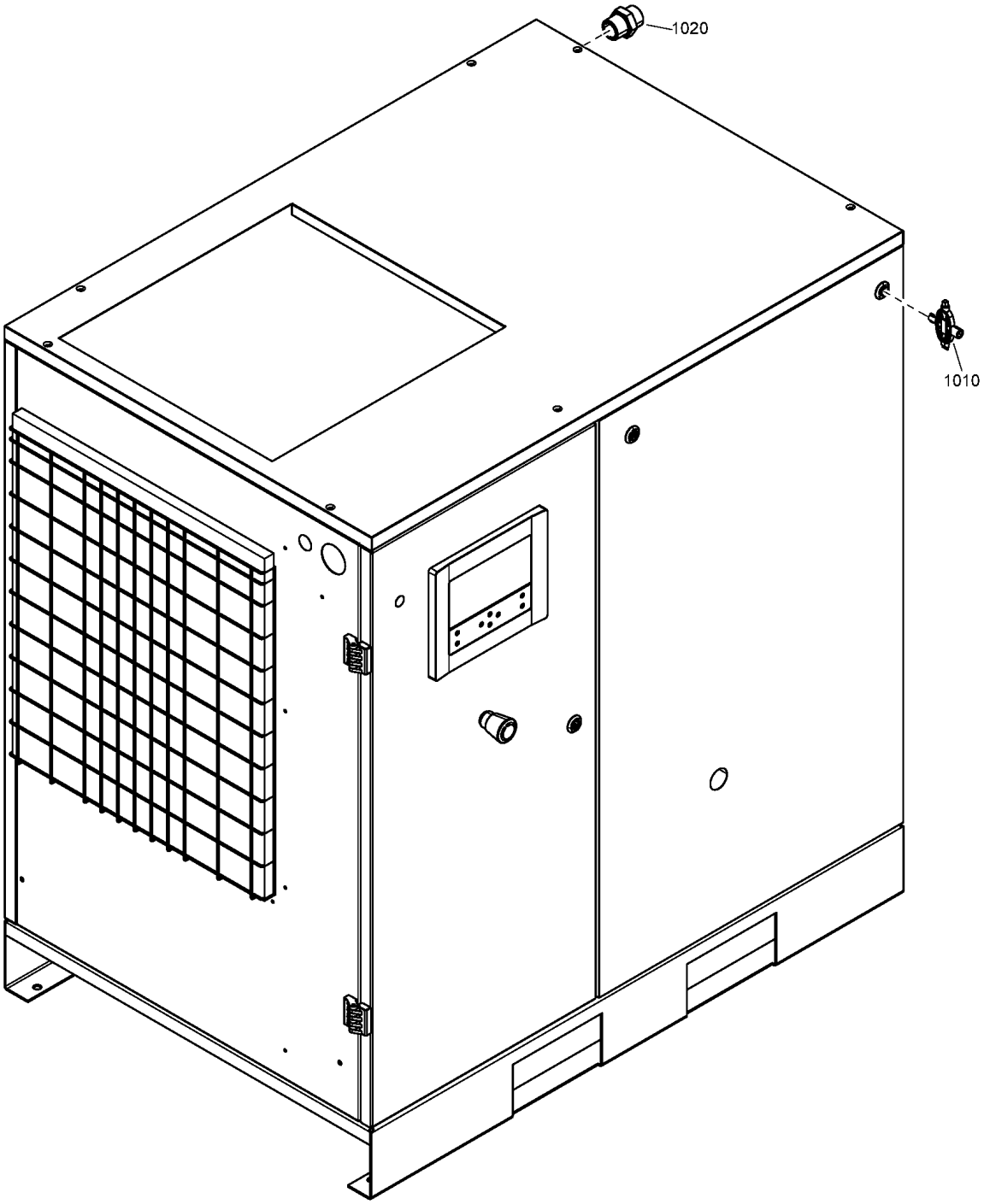
1020
1010

Ref	Part Number	Qty	Name	Validity
1010	6215 4359 00	1	UNIVERSAL KEY	**(21/08/2018 - ...)**
1020	6231 9454 00	1	NIPPLE	**(21/08/2018 - ...)**

Legend:

EAPPR:ULCUL - Electrical approval:UL/cUL IDRY:N - Integrated dryer:No MDVAR:FMOUNTED - Variant:Floor Mounted

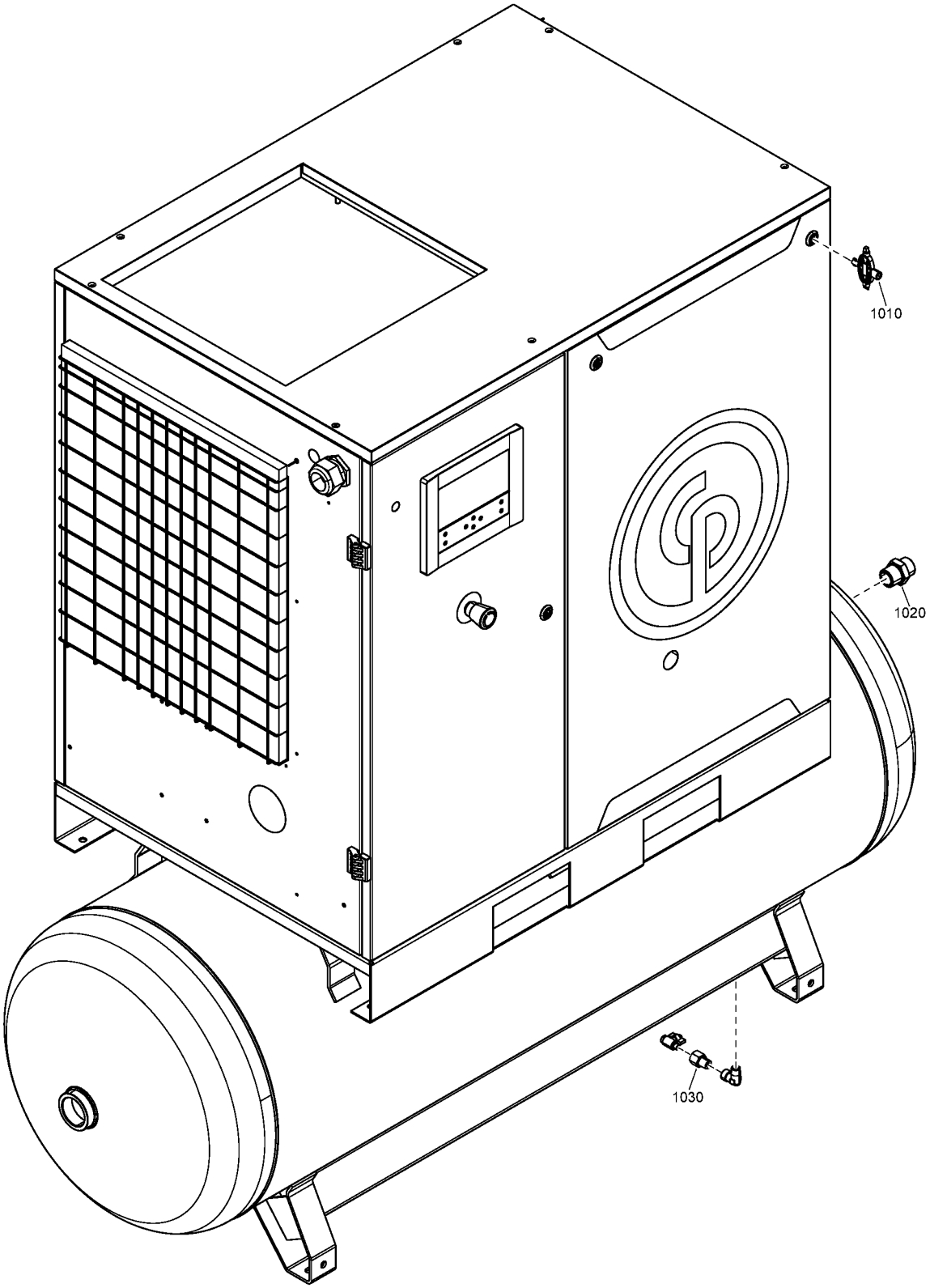
1010
1020
1030

Ref	Part Number	Qty	Name	Validity
1010	6215 4359 00	1	UNIVERSAL KEY	**(21/08/2018 - ...)**
1020	6231 9454 00	1	NIPPLE	**(21/08/2018 - ...)**
1030	2202 2610 67	1	REDUCER	**(21/08/2018 - ...)**

Legend:

EAPPR:ULCUL - Electrical approval:UL/cUL IDRY:N - Integrated dryer:No MDVAR:CU - Variant:Receiver mounted

29 - Loose parts UL-cUL - Floor-mounted - With dryer

EAPPR:ULCUL + IDRY:Y + MDVAR:FMOUNTED

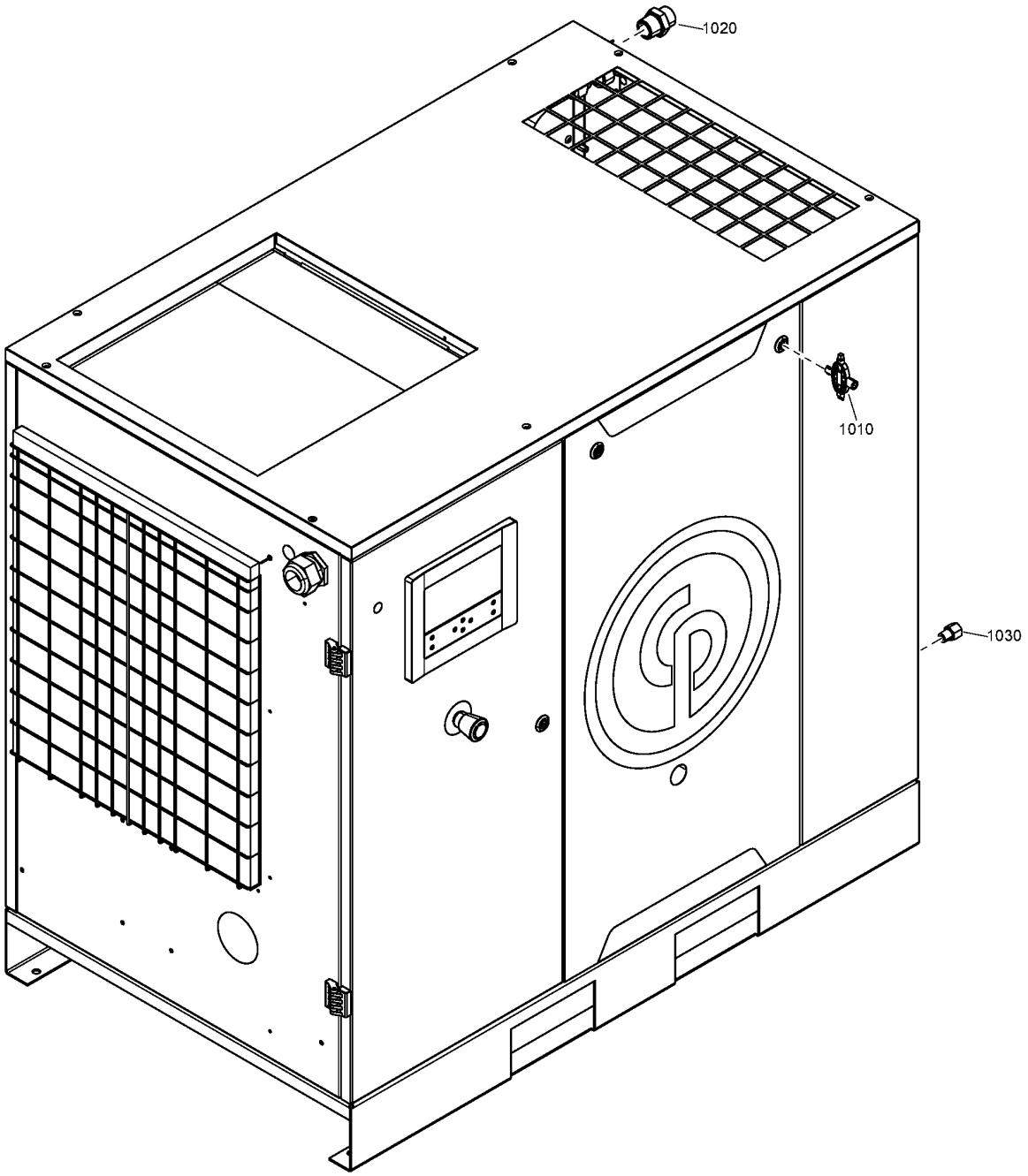

Ref	Part Number	Qty	Name	Validity
1010	6215 4359 00	1	UNIVERSAL KEY	**(21/08/2018 - ...)**
1020	6231 9454 00	1	NIPPLE	**(21/08/2018 - ...)**
1030	2202 2610 67	1	REDUCER	**(21/08/2018 - ...)**

Legend:

EAPPR:ULCUL - Electrical approval:UL/cUL
IDRY:Y - Integrated dryer:Yes
MDVAR:FMOUNTED - Variant:Floor Mounted

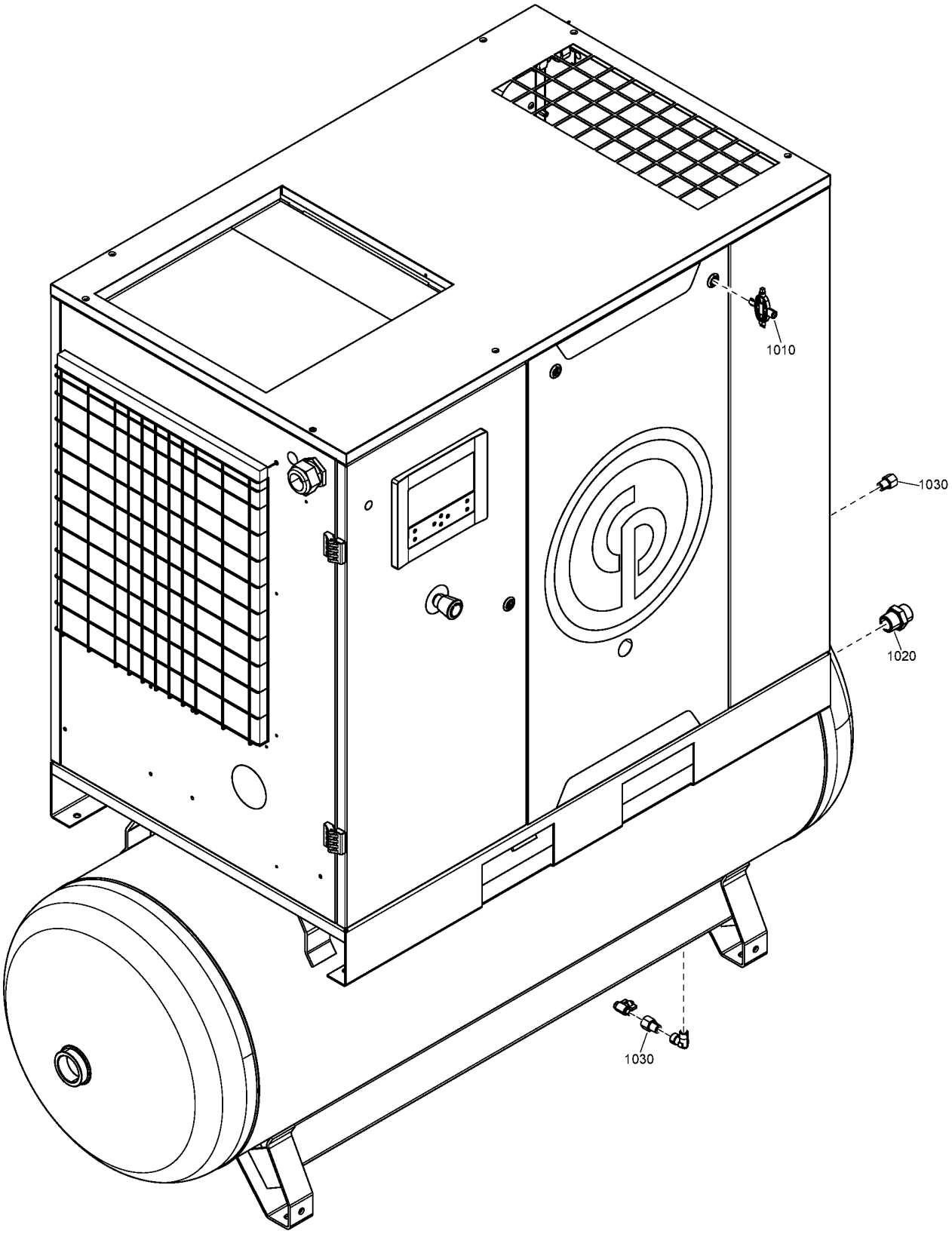
1010
1030
1020
1030

Ref	Part Number	Qty	Name	Validity
1010	6215 4359 00	1	UNIVERSAL KEY	**(21/08/2018 - ...)**
1020	6231 9454 00	1	NIPPLE	**(21/08/2018 - ...)**
1030	2202 2610 67	2	REDUCER	**(21/08/2018 - ...)**

Legend:

EAPPR:ULCUL - Electrical approval:UL/cUL IDRY:Y - Integrated dryer:Yes MDVAR:CU - Variant:Receiver mounted

31.1 - Assembly CPBg 20, CPVSd 21 - IEC - AS1210, ASME, CE, MOM, SA

((MAPPR:AS1210 , MAPPR:CE , MAPPR:MOM , MAPPR:SA) + FREQ:50HZ , FREQ:60HZ + MAPPR:ASME) + (MODEL:CPBG20_18J , MODEL:CPVD21_18J) + EAPPR:IEC + IDRY:Y

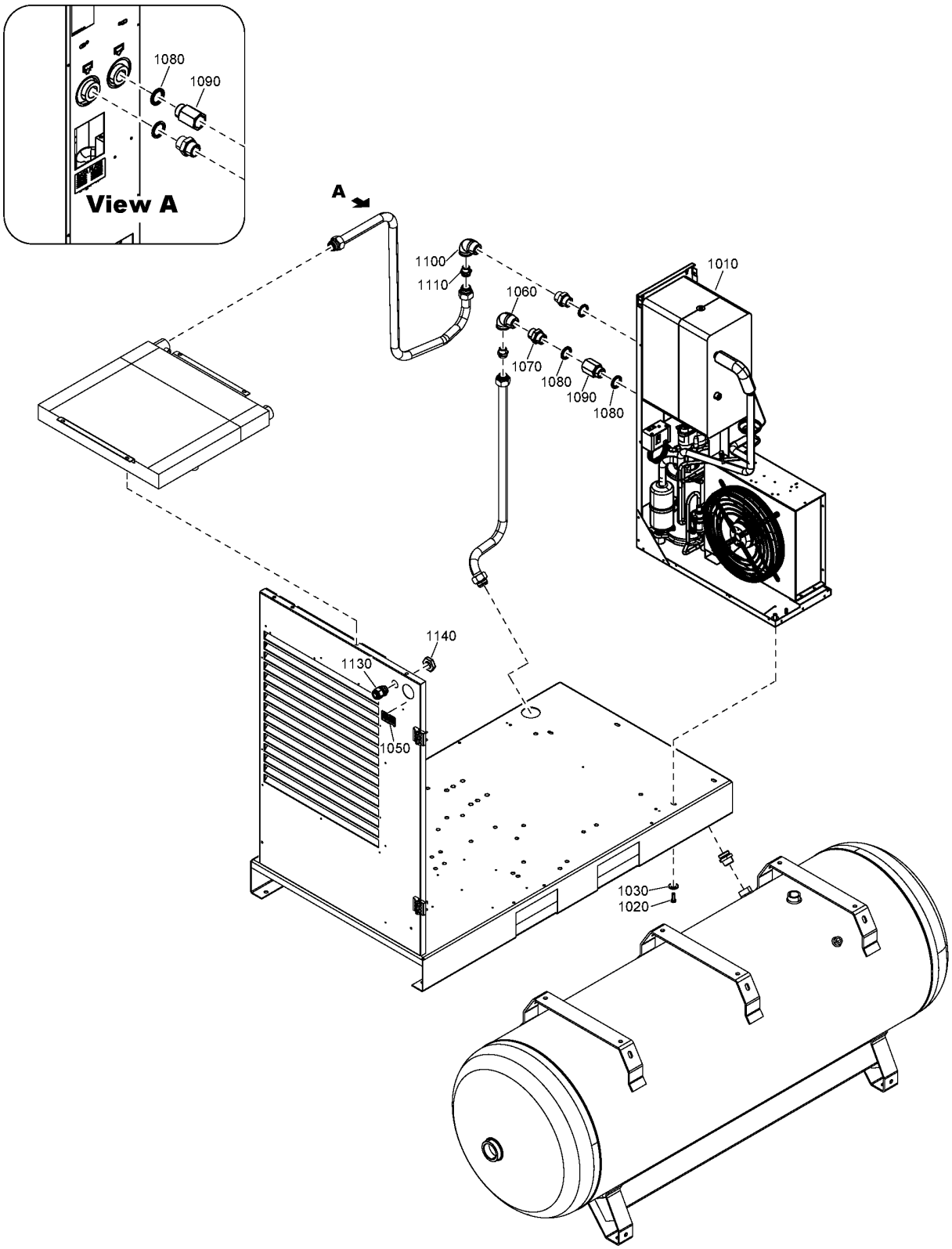

31.1 - Assembly CPBg 20, CPVSd 21 - IEC - AS1210, ASME, CE, MOM, SA

((MAPPR:AS1210 , MAPPR:CE , MAPPR:MOM , MAPPR:SA) + FREQ:50HZ , FREQ:60HZ + MAPPR:ASME) + (MODEL:CPBG20_18J , MODEL:CPVD21_18J) + EAPPR:IEC + IDRY:Y

Ref	Part Number	Qty	Name	Validity
1010		1	AIR DRYER	
1020	0147 1325 03	4	HEXAGON HEAD SCREW	**(21/08/2018 - 21/08/2018)** MODEL:CPBG20_18J **(22/08/2018 - ...)**
1030	2202 9045 01	4	WASHER	**(21/08/2018 - 21/08/2018)** MODEL:CPBG20_18J **(22/08/2018 - ...)**
1050	2202 7765 00	2	LABEL	**(21/08/2018 - 21/08/2018)** (MAPPR:AS1210 , MAPPR:CE , MAPPR:MOM , MAPPR:SA) + FREQ:50HZ + MODEL:CPBG20_18J **(22/08/2018 - ...)** (MAPPR:AS1210 , MAPPR:CE , MAPPR:MOM , MAPPR:SA) + FREQ:50HZ
1050	2202 2610 00	2	LABEL	**(21/08/2018 - 21/08/2018)** FREQ:60HZ + MAPPR:ASME + MODEL:CPBG20_18J **(22/08/2018 - ...)** FREQ:60HZ + MAPPR:ASME
1060	0560 0200 24	1	ELBOW	**(21/08/2018 - 21/08/2018)** MODEL:CPBG20_18J **(22/08/2018 - ...)**
1070	0571 0036 87	1	NIPPLE	**(21/08/2018 - 21/08/2018)** MODEL:CPBG20_18J **(22/08/2018 - ...)**
1080	0661 1000 44	2	SEAL WASHER	**(21/08/2018 - 21/08/2018)** MODEL:CPBG20_18J **(22/08/2018 - ...)**
1090	2204 1780 00	1	ADAPTOR	**(21/08/2018 - 21/08/2018)** MODEL:CPBG20_18J **(22/08/2018 - ...)**
1100	0560 1307 03	1	ELBOW	**(21/08/2018 - 21/08/2018)** MODEL:CPBG20_18J **(22/08/2018 - ...)**
1110	0580 0018 48	1	PIPE COUPLING	**(21/08/2018 - 21/08/2018)** MODEL:CPBG20_18J **(22/08/2018 - ...)**
1130	0698 5141 22	1	CABLE GLAND	**(05/12/2018 - ...)**
1140	0697 9809 54	1	LOCKNUT	**(05/12/2018 - ...)**

Legend:

EAPPR:IEC - Electrical approval:IEC
FREQ:50HZ - Frequency:50 Hz
FREQ:60HZ - Frequency:60 Hz
IDRY:Y - Integrated dryer:Yes
MAPPR:AS1210 - Pressure Vessel Approval:AS1210
MAPPR:ASME - Pressure Vessel Approval:ASME (U Stamp)
MAPPR:CE - Pressure Vessel Approval:CE
MAPPR:MOM - Pressure Vessel Approval:MOM
MAPPR:SA - Pressure Vessel Approval:SA
MODEL:CPBG20_18J - Model:CPBg 20
MODEL:CPVD21_18J - Model:CPVSd 21

31.2 - Assembly CPBg 25, CPVSd 25, CPBg 29, CPVSd 29, CPBg 34, CPVSd 34 - IEC - AS1210, ASME, CE, MOM, SA

((MAPPR:AS1210 , MAPPR:CE , MAPPR:MOM , MAPPR:SA) + FREQ:50HZ , FREQ:60HZ + MAPPR:ASME) + (MODEL:CPBG25_18J , MODEL:CPBG29_18J , MODEL:CPBG34_18J , MODEL:CPVD25_18J , MODEL:CPVD29_18J , MODEL:CPVD34_18J) + EAPPR:IEC + IDRY:Y

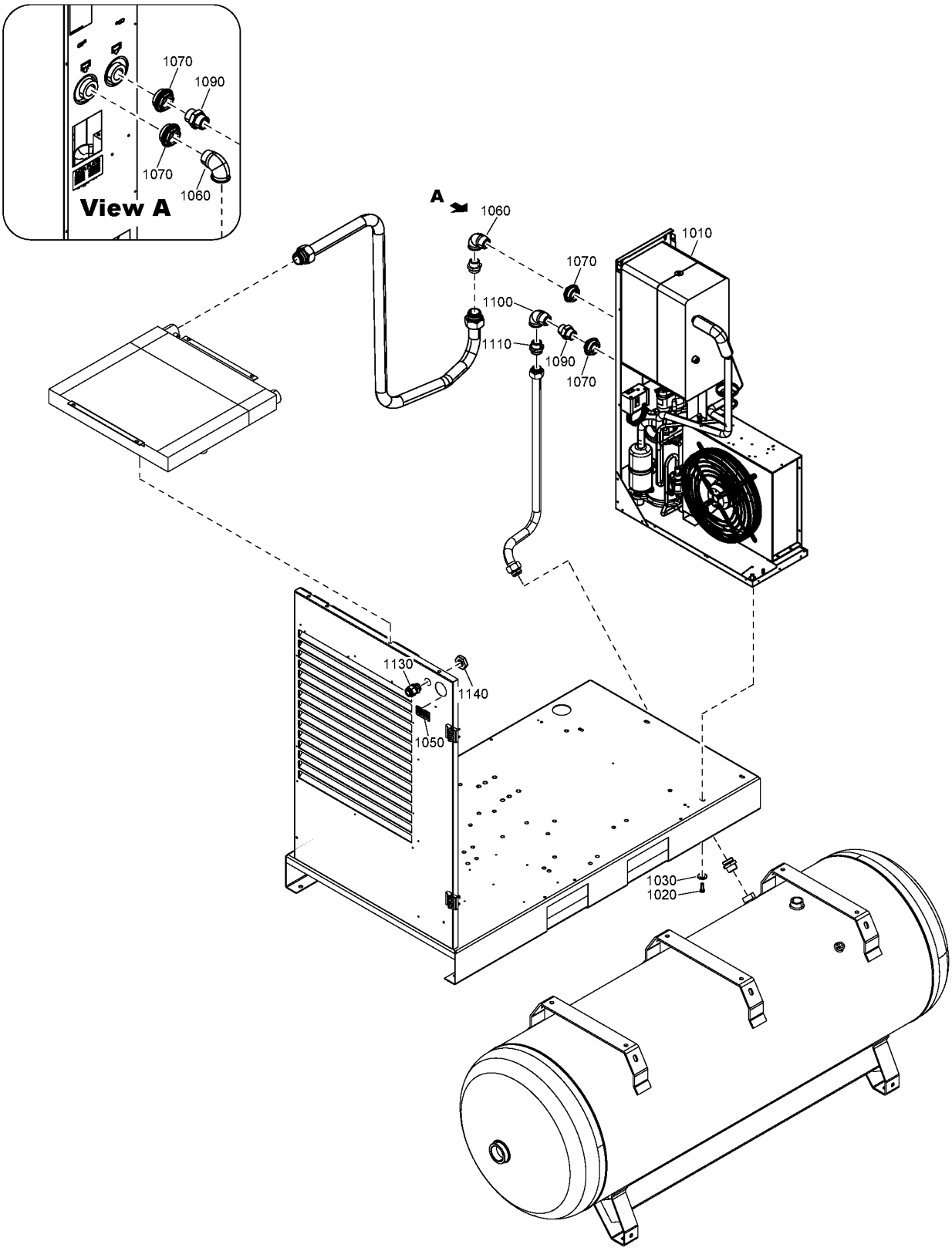

31.2 - Assembly CPBg 25, CPVSd 25, CPBg 29, CPVSd 29, CPBg 34, CPVSd 34 - IEC - AS1210, ASME, CE, MOM, SA

((MAPPR:AS1210 , MAPPR:CE , MAPPR:MOM , MAPPR:SA) + FREQ:50HZ , FREQ:60HZ + MAPPR:ASME) + (MODEL:CPBG25_18J , MODEL:CPBG29_18J , MODEL:CPBG34_18J , MODEL:CPVD25_18J , MODEL:CPVD29_18J , MODEL:CPVD34_18J) + EAPPR:IEC + IDRY:Y

Ref	Part Number	Qty	Name	Validity
1010		1	AIR DRYER	
1020	0147 1325 03	4	HEXAGON HEAD SCREW	**(21/08/2018 - 21/08/2018)** MODEL:CPBG25_18J , MODEL:CPBG29_18J , MODEL:CPBG34_18J **(22/08/2018 - ...)**
1030	2202 9045 01	4	WASHER	**(21/08/2018 - 21/08/2018)** MODEL:CPBG25_18J , MODEL:CPBG29_18J , MODEL:CPBG34_18J **(22/08/2018 - ...)**
1050	2202 2610 00	2	LABEL	**(21/08/2018 - 21/08/2018)** (MODEL:CPBG25_18J , MODEL:CPBG29_18J , MODEL:CPBG34_18J) + FREQ:60HZ + MAPPR:ASME **(22/08/2018 - ...)** FREQ:60HZ + MAPPR:ASME
1050	2202 7765 00	2	LABEL	**(21/08/2018 - 21/08/2018)** (MAPPR:AS1210 , MAPPR:CE , MAPPR:MOM , MAPPR:SA) + (MODEL:CPBG25_18J , MODEL:CPBG29_18J , MODEL:CPBG34_18J) + FREQ:50HZ **(22/08/2018 - ...)** (MAPPR:AS1210 , MAPPR:CE , MAPPR:MOM , MAPPR:SA) + FREQ:50HZ
1060	0560 1307 03	1	ELBOW	**(21/08/2018 - 21/08/2018)** MODEL:CPBG25_18J , MODEL:CPBG29_18J , MODEL:CPBG34_18J **(22/08/2018 - ...)**
1070	2202 9285 04	2	REDUCER	**(21/08/2018 - 21/08/2018)** MODEL:CPBG25_18J , MODEL:CPBG29_18J , MODEL:CPBG34_18J **(22/08/2018 - ...)**
1090	0603 4106 03	1	NIPPLE	**(21/08/2018 - 21/08/2018)** MODEL:CPBG25_18J , MODEL:CPBG29_18J , MODEL:CPBG34_18J **(22/08/2018 - ...)**
1100	0560 0200 24	1	ELBOW	**(21/08/2018 - 21/08/2018)** MODEL:CPBG25_18J , MODEL:CPBG29_18J , MODEL:CPBG34_18J **(22/08/2018 - ...)**
1110	0580 0018 48	1	PIPE COUPLING	**(21/08/2018 - 21/08/2018)** MODEL:CPBG25_18J , MODEL:CPBG29_18J , MODEL:CPBG34_18J **(22/08/2018 - ...)**
1130	0698 5141 22	1	CABLE GLAND	**(05/12/2018 - ...)**
1140	0697 9809 54	1	LOCKNUT	**(05/12/2018 - ...)**

Legend:

EAPPR:IEC - Electrical approval:IEC
FREQ:50HZ - Frequency:50 Hz
FREQ:60HZ - Frequency:60 Hz
IDRY:Y - Integrated dryer:Yes
MAPPR:AS1210 - Pressure Vessel Approval:AS1210
MAPPR:ASME - Pressure Vessel Approval:ASME (U Stamp)
MAPPR:CE - Pressure Vessel Approval:CE
MAPPR:MOM - Pressure Vessel Approval:MOM
MAPPR:SA - Pressure Vessel Approval:SA
MODEL:CPBG25_18J - Model:CPBg 25
MODEL:CPBG29_18J - Model:CPBg 29
MODEL:CPBG34_18J - Model:CPBg 34
MODEL:CPVD25_18J - Model:CPVSd 25
MODEL:CPVD29_18J - Model:CPVSd 29
MODEL:CPVD34_18J - Model:CPVSd 34

31.3 - Assembly CPBg 20, CPVSd 21 - UL-cUL - ASME

(MODEL:CPBG20_18J , MODEL:CPVD21_18J) + EAPPR:ULCUL + FREQ:60HZ + IDRY:Y + MAPPR:ASME

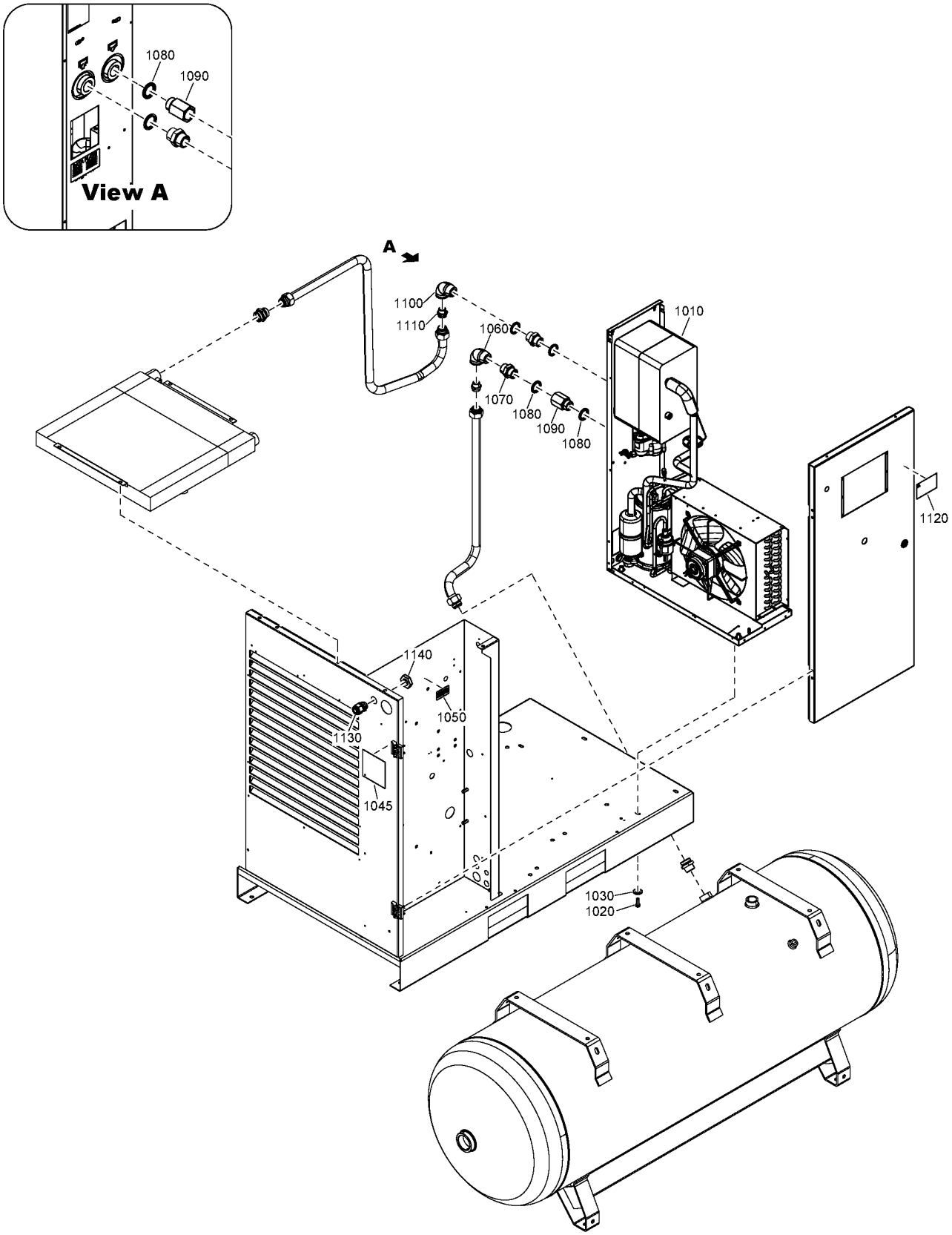

Ref	Part Number	Qty	Name	Validity
1010		1	AIR DRYER	**(21/08/2018 - 21/08/2018)** MODEL:CPBG20_18J **(22/08/2018 - ...)**
1020	0147 1325 03	4	HEXAGON HEAD SCREW	**(21/08/2018 - 21/08/2018)** MODEL:CPBG20_18J **(22/08/2018 - ...)**
1030	2202 9045 01	4	WASHER	**(21/08/2018 - 21/08/2018)** MODEL:CPBG20_18J **(22/08/2018 - ...)**
1045	2204 2155 01	1	LABEL	**(01/02/2019 - ...)**
1050	2202 2610 01	2	LABEL	**(21/08/2018 - 21/08/2018)** MODEL:CPBG20_18J **(22/08/2018 - ...)**
1060	0560 0200 24	1	ELBOW	**(21/08/2018 - 21/08/2018)** MODEL:CPBG20_18J **(22/08/2018 - ...)**
1070	0571 0036 87	1	NIPPLE	**(21/08/2018 - 21/08/2018)** MODEL:CPBG20_18J **(22/08/2018 - ...)**
1080	0661 1000 44	2	SEAL WASHER	**(21/08/2018 - 21/08/2018)** MODEL:CPBG20_18J **(22/08/2018 - ...)**
1090	2204 1780 00	1	ADAPTOR	**(21/08/2018 - 21/08/2018)** MODEL:CPBG20_18J **(22/08/2018 - ...)**
1100	0560 1307 03	1	ELBOW	**(21/08/2018 - 21/08/2018)** MODEL:CPBG20_18J **(22/08/2018 - ...)**
1110	0580 0018 48	1	PIPE COUPLING	**(21/08/2018 - 21/08/2018)** MODEL:CPBG20_18J **(22/08/2018 - ...)**
1120	2202 8731 04	1	LABEL CAUTION MULTIPLE SUPPLY	**(21/08/2018 - 21/08/2018)** MODEL:CPBG20_18J **(22/08/2018 - ...)**
1130	0698 5141 22	1	CABLE GLAND	**(05/12/2018 - ...)**
1140	0697 9809 54	1	LOCKNUT	**(05/12/2018 - ...)**

Legend:

EAPPR:ULCUL - Electrical approval:UL/cUL
FREQ:60HZ - Frequency:60 Hz
IDRY:Y - Integrated dryer:Yes
MAPPR:ASME - Pressure Vessel Approval:ASME (U Stamp)
MODEL:CPBG20_18J - Model:CPBg 20
MODEL:CPVD21_18J - Model:CPVSd 21

31.4 - Assembly (CRNASME, (CPBg 25, CPVSd 25, CPBg 29, CPVSd 29, CPBg 34, CPVSd 34 - ASME)) - UL-cUL

((MAPPR:ASME , MAPPR:CRNASME) + (MODEL:CPBG25_18J , MODEL:CPBG29_18J , MODEL:CPBG34_18J , MODEL:CPVD25_18J , MODEL:CPVD29_18J , MODEL:CPVD34_18J) , (MODEL:CPBG20_18J , MODEL:CPVD21_18J) + MAPPR:CRNASME) + EAPPR:ULCUL + FREQ:60HZ + IDRY:Y

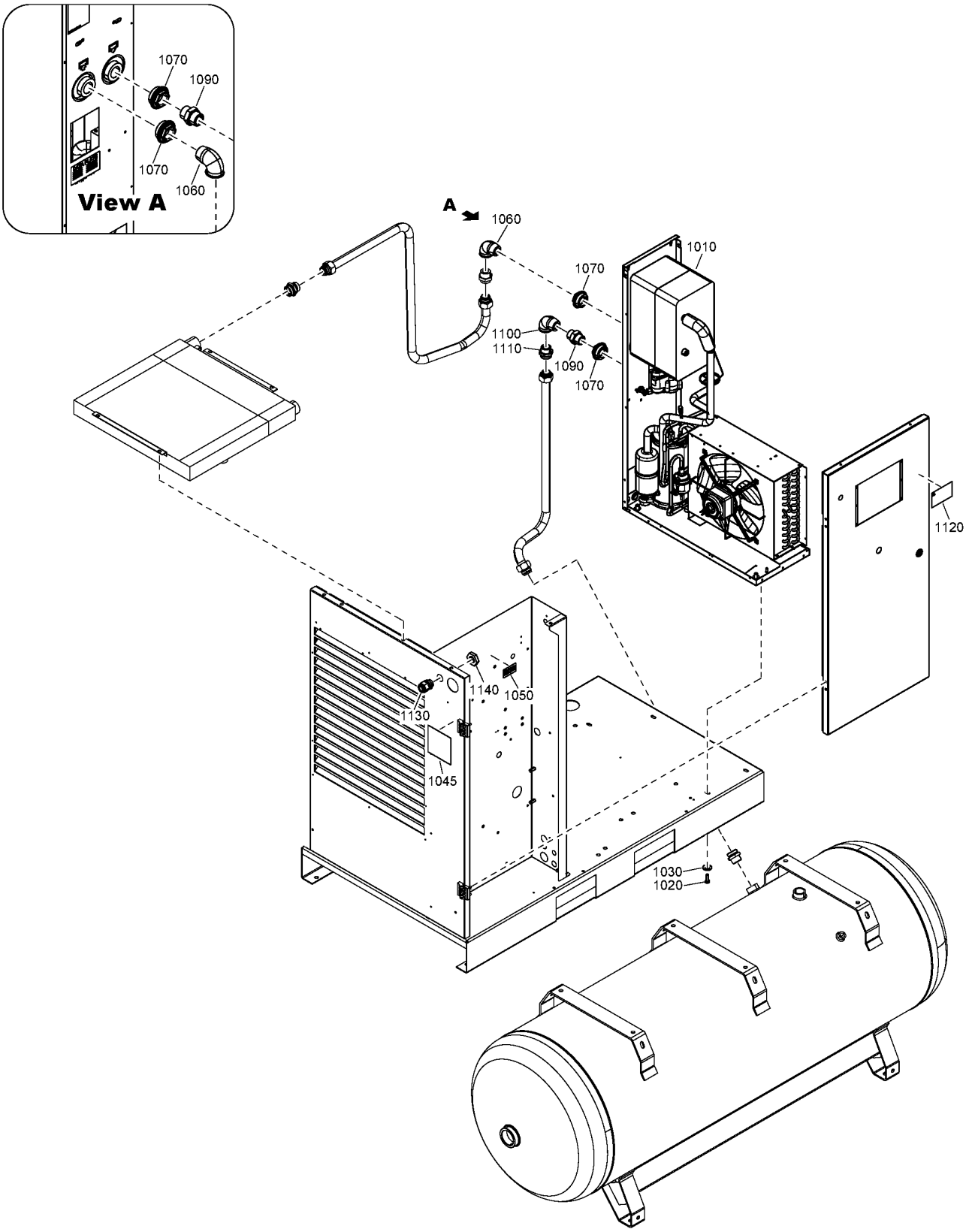

31.4 - Assembly (CRNASME, (CPBg 25, CPVSd 25, CPBg 29, CPVSd 29, CPBg 34, CPVSd 34 - ASME)) - UL-cUL

((MAPPR:ASME , MAPPR:CRNASME) + (MODEL:CPBG25_18J , MODEL:CPBG29_18J , MODEL:CPBG34_18J , MODEL:CPVD25_18J , MODEL:CPVD29_18J , MODEL:CPVD34_18J) , (MODEL:CPBG20_18J , MODEL:CPVD21_18J) + MAPPR:CRNASME) + EAPPR:ULCUL + FREQ:60HZ + IDRY:Y

Ref	Part Number	Qty	Name	Validity
1010		1	AIR DRYER	**(22/08/2018 - ...)**
1020	0147 1325 03	4	HEXAGON HEAD SCREW	**(21/08/2018 - 21/08/2018)** (MAPPR:ASME , MAPPR:CRNASME) + (MODEL:CPBG25_18J , MODEL:CPBG29_18J , MODEL:CPBG34_18J) , MAPPR:CRNASME + MODEL:CPBG20_18J **(22/08/2018 - ...)**
1030	2202 9045 01	4	WASHER	**(21/08/2018 - 21/08/2018)** (MAPPR:ASME , MAPPR:CRNASME) + (MODEL:CPBG25_18J , MODEL:CPBG29_18J , MODEL:CPBG34_18J) , MAPPR:CRNASME + MODEL:CPBG20_18J **(22/08/2018 - ...)**
1045	2204 2155 01	1	LABEL	**(01/02/2019 - ...)** (MODEL:CPBG25_18J , MODEL:CPBG29_18J , MODEL:CPBG34_18J , MODEL:CPVD25_18J , MODEL:CPVD29_18J , MODEL:CPVD34_18J) + MAPPR:ASME
1050	2202 2610 01	2	LABEL	**(21/08/2018 - 21/08/2018)** (MODEL:CPBG25_18J , MODEL:CPBG29_18J , MODEL:CPBG34_18J) + MAPPR:ASME **(22/08/2018 - 04/12/2018)** (MODEL:CPBG25_18J , MODEL:CPBG29_18J , MODEL:CPBG34_18J , MODEL:CPVD25_18J , MODEL:CPVD29_18J , MODEL:CPVD34_18J) + MAPPR:ASME **(05/12/2018 - ...)**
1060	0560 1307 03	1	ELBOW	**(21/08/2018 - 21/08/2018)** (MAPPR:ASME , MAPPR:CRNASME) + (MODEL:CPBG25_18J , MODEL:CPBG29_18J , MODEL:CPBG34_18J) , MAPPR:CRNASME + MODEL:CPBG20_18J **(22/08/2018 - ...)**
1070	2202 9285 04	2	REDUCER	**(21/08/2018 - 21/08/2018)** (MAPPR:ASME , MAPPR:CRNASME) + (MODEL:CPBG25_18J , MODEL:CPBG29_18J , MODEL:CPBG34_18J) , MAPPR:CRNASME + MODEL:CPBG20_18J **(22/08/2018 - ...)**
1090	0603 4106 03	1	NIPPLE	**(21/08/2018 - 21/08/2018)** (MAPPR:ASME , MAPPR:CRNASME) + (MODEL:CPBG25_18J , MODEL:CPBG29_18J , MODEL:CPBG34_18J) , MAPPR:CRNASME + MODEL:CPBG20_18J **(22/08/2018 - ...)**
1100	0560 0200 24	1	ELBOW	**(21/08/2018 - 21/08/2018)** (MAPPR:ASME , MAPPR:CRNASME) + (MODEL:CPBG25_18J , MODEL:CPBG29_18J , MODEL:CPBG34_18J) , MAPPR:CRNASME + MODEL:CPBG20_18J **(22/08/2018 - ...)**
1110	0580 0018 48	1	PIPE COUPLING	**(21/08/2018 - 21/08/2018)** (MAPPR:ASME , MAPPR:CRNASME) + (MODEL:CPBG25_18J , MODEL:CPBG29_18J , MODEL:CPBG34_18J) , MAPPR:CRNASME + MODEL:CPBG20_18J **(22/08/2018 - ...)**
1120	2202 8731 04	1	LABEL CAUTION MULTIPLE SUPPLY	**(21/08/2018 - 21/08/2018)** (MAPPR:ASME , MAPPR:CRNASME) + (MODEL:CPBG25_18J , MODEL:CPBG29_18J , MODEL:CPBG34_18J) , MAPPR:CRNASME + MODEL:CPBG20_18J **(22/08/2018 - ...)**
1130	0698 5141 22	1	CABLE GLAND	**(05/12/2018 - ...)**
1140	0697 9809 54	1	LOCKNUT	**(05/12/2018 - ...)**

Legend:

EAPPR:ULCUL - Electrical approval:UL/cUL
MAPPR:ASME - Pressure Vessel Approval:ASME (U Stamp)
MODEL:CPBG25_18J - Model:CPBg 25
MODEL:CPVD21_18J - Model:CPVSd 21
MODEL:CPVD34_18J - Model:CPVSd 34
FREQ:60HZ - Frequency:60 Hz
MAPPR:CRNASME - Pressure Vessel Approval:CRN (based on ASME)
MODEL:CPBG29_18J - Model:CPBg 29
MODEL:CPVD25_18J - Model:CPVSd 25
IDRY:Y - Integrated dryer:Yes
MODEL:CPBG20_18J - Model:CPBg 20
MODEL:CPBG34_18J - Model:CPBg 34
MODEL:CPVD29_18J - Model:CPVSd 29

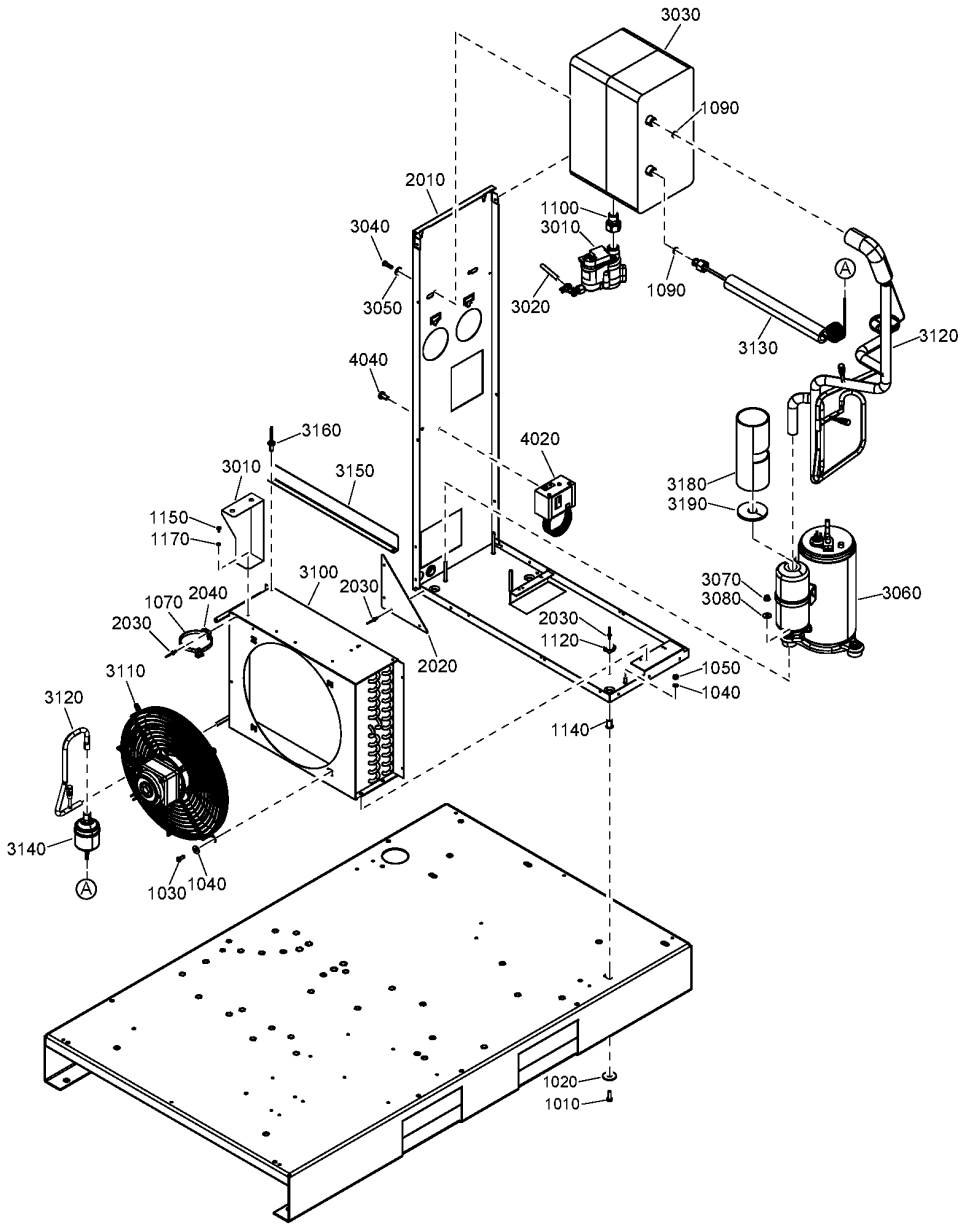
3030
1090
2010
1100
3010
3040
3050
3020
1090
A
3130
3120
4040
3160
4020
3010
3150
3180
3190
1150
1170
3100
2030
3070
3080
3060
1070
2040
2030
2030
1120
2020
1050
1040
3110
3120
1140
3140
A
1030
1040
1020
1010

Ref	Part Number	Qty	Name	Validity	R.
	~~2200 9854 09~~	1	AIR DRYER		
	Substituted by:	2200 9037 09 - E8V 230/50 2200985409 SPARE (quantity: 1)			
	Remarks:	Refrigerant R410A			
1010	0226 3256 00	3	SCREW	(21/08/2018 - 21/08/2018) (22/08/2018 - ...) MODEL:CPBG20_18J	
1020	0300 0274 70	3	WASHER	(21/08/2018 - 21/08/2018) (22/08/2018 - ...) MODEL:CPBG20_18J	
1030	0215 0003 91	4	SCREW	(21/08/2018 - 21/08/2018) (22/08/2018 - ...) MODEL:CPBG20_18J	
1040	0333 3220 00	2	WASHER	(05/12/2018 - ...)	
1050	0266 2108 00	2	HEXAGON NUT	(21/08/2018 - 21/08/2018) (22/08/2018 - ...) MODEL:CPBG20_18J	
1070	0348 0101 20	10	CABLE TIE	(21/08/2018 - 21/08/2018) (22/08/2018 - ...) MODEL:CPBG20_18J	
1090	2202 7425 01	2	RING	(21/08/2018 - 21/08/2018) (22/08/2018 - ...) MODEL:CPBG20_18J	
1100	2202 7703 01	1	PIPE FITTING	(21/08/2018 - 21/08/2018) (22/08/2018 - ...) MODEL:CPBG20_18J	
1120	0348 0110 03	2	ANCHOR PLATE	(21/08/2018 - 21/08/2018) (22/08/2018 - 30/12/2040) MODEL:CPBG20_18J	
1140	0298 1000 22	4	INSERT	(21/08/2018 - 21/08/2018) (22/08/2018 - ...) MODEL:CPBG20_18J	
1150	0147 1169 03	1	HEXAGON HEAD SCREW	(21/08/2018 - 21/08/2018) (22/08/2018 - ...) MODEL:CPBG20_18J	
1170	0333 3114 00	1	WASHER	(21/08/2018 - 21/08/2018) (22/08/2018 - ...) MODEL:CPBG20_18J	
2010	2204 2070 81	1	FRAME	(21/08/2018 - 21/08/2018) (22/08/2018 - ...) MODEL:CPBG20_18J	
	• 1079 9903 48	1	WARNING LABEL		
	• 1627 1828 00	1	DECAL WARNING		
2020	2202 7706 00	2	SUPPORT	(21/08/2018 - 21/08/2018) (22/08/2018 - ...) MODEL:CPBG20_18J	
2030	0129 3270 40	9	BLIND RIVET	(21/08/2018 - 21/08/2018) (22/08/2018 - ...) MODEL:CPBG20_18J	
2040	0348 0110 03	1	ANCHOR PLATE	(21/08/2018 - 21/08/2018) (22/08/2018 - ...) MODEL:CPBG20_18J	
3010	2204 2134 43	1	LDI DRAIN	(15/01/2019 - ...)	
	• 0663 9096 00	1	O-RING		
	• 2200 9020 17	1	KIT WEAR DRAIN		
	• 2902 0161 02	1	FILTER MESH LD20X - ED12		
3020	0070 6002 49	1	PLASTIC TUBE	(21/08/2018 - 21/08/2018) (22/08/2018 - 02/10/2018) MODEL:CPBG20_18J	
3020	0070 6002 49	2	PLASTIC TUBE	(04/10/2018 - ...)	
3030	2204 1844 81	1	HEAT EXCHANGER	(21/08/2018 - 21/08/2018) (22/08/2018 - ...) MODEL:CPBG20_18J	
3040	0147 1247 03	2	HEXAGON BOLT	(21/08/2018 - 21/08/2018) (22/08/2018 - ...) MODEL:CPBG20_18J	
3050	0300 0274 64	2	WASHER	(21/08/2018 - 21/08/2018) (22/08/2018 - ...) MODEL:CPBG20_18J	
3060	1624 2616 10	1	COMPRESSOR	(21/08/2018 - 21/08/2018) (22/08/2018 - ...) MODEL:CPBG20_18J	
	• 1624 2725 01	1	CAPACITOR		
3070	0291 1185 29	3	NUT	(21/08/2018 - 21/08/2018) (22/08/2018 - ...) MODEL:CPBG20_18J	
3080	0300 0274 64	3	WASHER	(21/08/2018 - 21/08/2018) (22/08/2018 - ...) MODEL:CPBG20_18J	
3100	2204 2163 01	1	CONDENSOR	(21/08/2018 - 21/08/2018) (22/08/2018 - ...) MODEL:CPBG20_18J	
3110	2202 7373 02	1	MOTOR FAN	(21/08/2018 - 21/08/2018) (22/08/2018 - ...) MODEL:CPBG20_18J	
3120	2204 2062 80	1	PIPE ASSEMBLY	(21/08/2018 - 21/08/2018) (22/08/2018 - ...) MODEL:CPBG20_18J	
	• 1624 2486 03	1	HGB VALVE		
	• 2202 8516 00	3	SCHRADER VALVE	(07/02/2019 - ...)	
	•• 2204 1638 01	1	PIN		
3130	2202 7413 02	1	CAPILLARY	(21/08/2018 - 21/08/2018) (22/08/2018 - ...) MODEL:CPBG20_18J	

Legend:

EAPPR:IEC - Electrical approval:IEC
FREQ:50HZ - Frequency:50 Hz
IDRY:Y - Integrated dryer:Yes
MAPPR:AS1210 - Pressure Vessel Approval:AS1210
MAPPR:CE - Pressure Vessel Approval:CE
MAPPR:MOM - Pressure Vessel Approval:MOM
MAPPR:SA - Pressure Vessel Approval:SA
MODEL:CPBG20_18J - Model:CPBg 20
MODEL:CPVD21_18J - Model:CPVSd 21

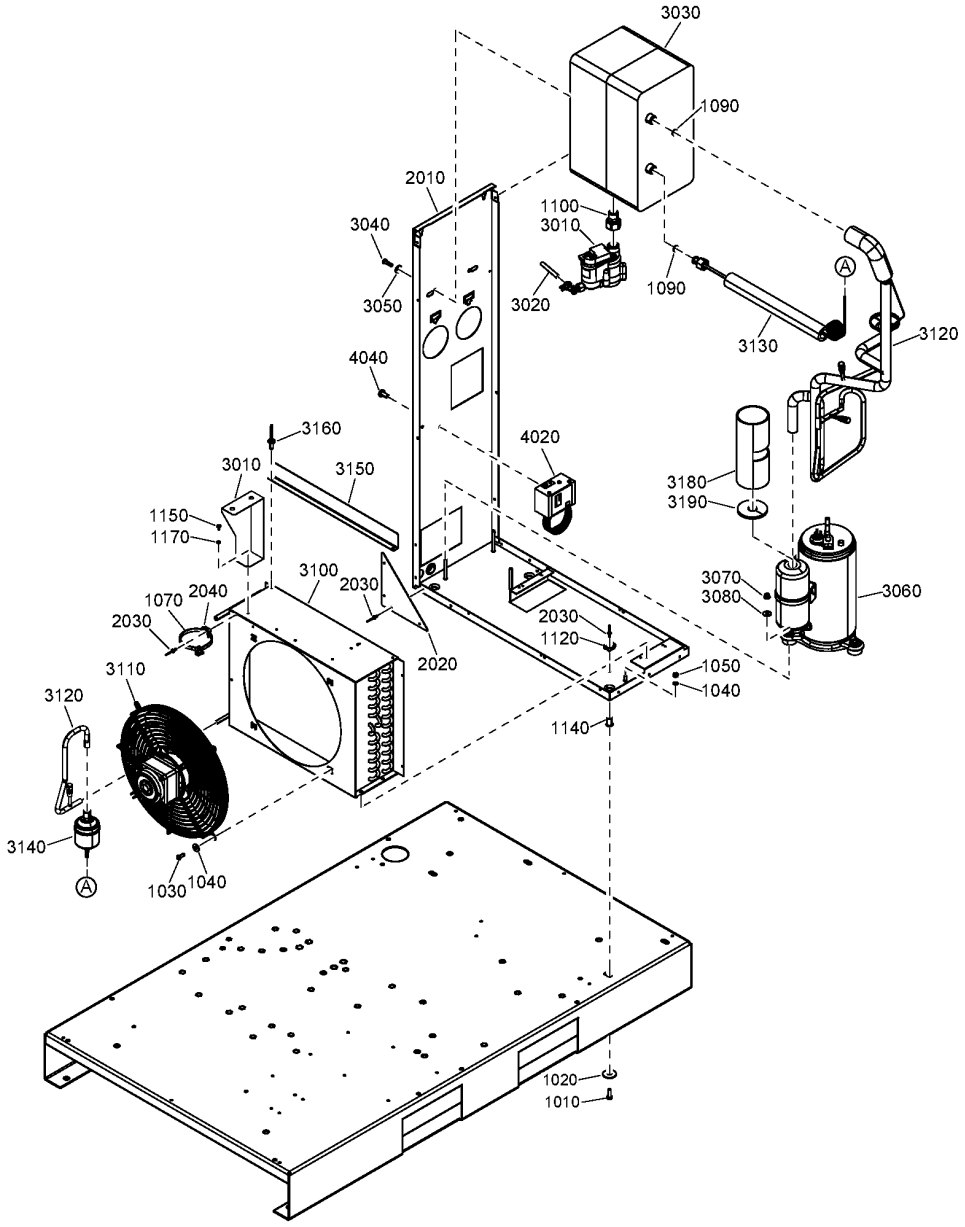
3030
1090
2010
1100
3010
3040
3050
3020
1090
A
3130
3120
4040
3160
4020
3010
3150
3180
3190
1150
1170
3100
2030
3070
3080
3060
1070
2040
2030
2030
1120
2020
1050
1040
3110
3120
1140
3140
A
1030
1040
1020
1010

Ref	Part Number	Qty	Name	Validity	R.
3140	2202 7898 01	1	FILTER DRYER	**(21/08/2018 - 21/08/2018)** MODEL:CPBG20_18J **(22/08/2018 - ...)**	
3150	1627 1679 00	1	BRACKET	**(21/08/2018 - 21/08/2018)** MODEL:CPBG20_18J **(22/08/2018 - ...)**	
3160	0129 3270 40	2	BLIND RIVET	**(21/08/2018 - 21/08/2018)** MODEL:CPBG20_18J **(22/08/2018 - ...)**	
3180	1627 1843 00	1	INSULATION THERMAL	**(21/08/2018 - 21/08/2018)** MODEL:CPBG20_18J **(22/08/2018 - ...)**	
3190	1627 1844 00	1	INSULATION THERMAL	**(21/08/2018 - 21/08/2018)** MODEL:CPBG20_18J **(22/08/2018 - ...)**	
4020	1089 9139 25	1	FAN SWITCH	**(21/08/2018 - 21/08/2018)** MODEL:CPBG20_18J **(22/08/2018 - ...)**	
4040	0226 3256 00	2	SCREW	**(21/08/2018 - 21/08/2018)** MODEL:CPBG20_18J **(22/08/2018 - ...)**	

Legend:

EAPPR:IEC - Electrical approval:IEC
FREQ:50HZ - Frequency:50 Hz
IDRY:Y - Integrated dryer:Yes
MAPPR:AS1210 - Pressure Vessel Approval:AS1210
MAPPR:CE - Pressure Vessel Approval:CE
MAPPR:MOM - Pressure Vessel Approval:MOM
MAPPR:SA - Pressure Vessel Approval:SA
MODEL:CPBG20_18J - Model:CPBg 20
MODEL:CPVD21_18J - Model:CPVSd 21

31.6 - Components CPBg 25, CPVSd 25, CPBg 29, CPVSd 29, CPBg 34, CPVSd 34 - IEC - 50Hz - AS1210, CE, MOM, SA

(MAPPR:AS1210 , MAPPR:CE , MAPPR:MOM , MAPPR:SA) + (MODEL:CPBG25_18J , MODEL:CPBG29_18J , MODEL:CPBG34_18J , MODEL:CPVD25_18J , MODEL:CPVD29_18J , MODEL:CPVD34_18J) + EAPPR:IEC + FREQ:50HZ + IDRY:Y

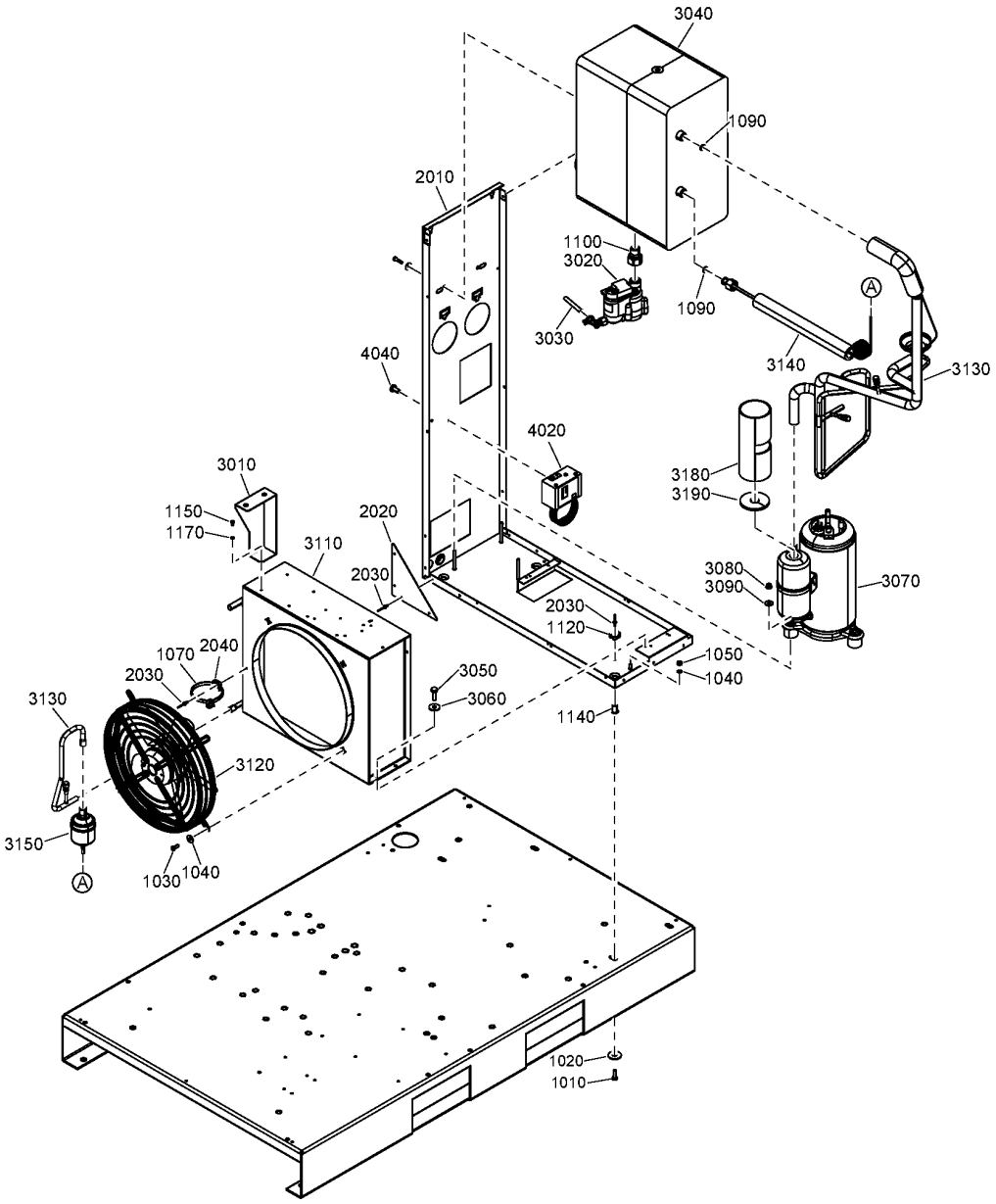

31.6 - Components CPBg 25, CPVSd 25, CPBg 29, CPVSd 29, CPBg 34, CPVSd 34 - IEC - 50Hz - AS1210, CE, MOM, SA

(MAPPR:AS1210 , MAPPR:CE , MAPPR:MOM , MAPPR:SA) + (MODEL:CPBG25_18J , MODEL:CPBG29_18J , MODEL:CPBG34_18J , MODEL:CPVD25_18J , MODEL:CPVD29_18J , MODEL:CPVD34_18J) + EAPPR:IEC + FREQ:50HZ + IDRY:Y

Ref	Part Number	Qty	Name	Validity	R.
	~~2200 9854 21~~	1	AIR DRYER	**(22/02/2018 - ...)** MODEL:CPBG25_18J , MODEL:CPBG29_18J , MODEL:CPBG34_18J , MODEL:CPVD25_18J , MODEL:CPVD29_18J , MODEL:CPVD34_18J	
	Substituted by:	2200 9037 21 - E8/9V 230/50 2200985421 SPARE (quantity: 1)			
	Remarks:	Refrigerant R410A			
	~~2200 9854 35~~	1	AIR DRYER	**(22/08/2018 - ...)** MODEL:CPBG34_18J , MODEL:CPVD34_18J	
	Substituted by:	2200 9037 35 - E8/9V 230/50 2200985435 SPARE (quantity: 1)			
	Remarks:	Refrigerant R410A			
1010	0226 3256 00	3	SCREW	**(21/08/2018 - 21/08/2018)** MODEL:CPBG25_18J , MODEL:CPBG29_18J , MODEL:CPBG34_18J **(22/08/2018 - ...)**	
1020	0300 0274 70	3	WASHER	**(21/08/2018 - 21/08/2018)** MODEL:CPBG25_18J , MODEL:CPBG29_18J , MODEL:CPBG34_18J **(22/08/2018 - ...)**	
1030	0215 0003 91	4	SCREW	**(21/08/2018 - 21/08/2018)** MODEL:CPBG25_18J , MODEL:CPBG29_18J , MODEL:CPBG34_18J **(22/08/2018 - ...)**	
1040	0333 3220 00	2	WASHER	**(05/12/2018 - ...)**	
1050	0266 2108 00	2	HEXAGON NUT	**(21/08/2018 - 21/08/2018)** MODEL:CPBG25_18J , MODEL:CPBG29_18J , MODEL:CPBG34_18J **(22/08/2018 - ...)**	
1070	0348 0101 20	10	CABLE TIE	**(21/08/2018 - 21/08/2018)** MODEL:CPBG25_18J , MODEL:CPBG29_18J , MODEL:CPBG34_18J **(22/08/2018 - ...)**	
1090	2202 7425 01	2	RING	**(21/08/2018 - 21/08/2018)** MODEL:CPBG25_18J , MODEL:CPBG29_18J , MODEL:CPBG34_18J **(22/08/2018 - ...)**	
1100	2202 7703 01	1	PIPE FITTING	**(21/08/2018 - 21/08/2018)** MODEL:CPBG25_18J , MODEL:CPBG29_18J , MODEL:CPBG34_18J **(22/08/2018 - ...)**	
1120	0348 0110 03	2	ANCHOR PLATE	**(21/08/2018 - 21/08/2018)** MODEL:CPBG25_18J , MODEL:CPBG29_18J , MODEL:CPBG34_18J **(22/08/2018 - 30/12/2040)**	
1140	0298 1000 22	4	INSERT	**(21/08/2018 - 21/08/2018)** MODEL:CPBG25_18J , MODEL:CPBG29_18J , MODEL:CPBG34_18J **(22/08/2018 - ...)**	
1150	0147 1169 03	1	HEXAGON HEAD SCREW	**(21/08/2018 - 21/08/2018)** MODEL:CPBG25_18J , MODEL:CPBG29_18J , MODEL:CPBG34_18J **(22/08/2018 - ...)**	
1170	0333 3114 00	1	WASHER	**(21/08/2018 - 21/08/2018)** MODEL:CPBG25_18J , MODEL:CPBG29_18J , MODEL:CPBG34_18J **(22/08/2018 - ...)**	
2010	2204 2070 81	1	FRAME	**(21/08/2018 - 21/08/2018)** MODEL:CPBG25_18J , MODEL:CPBG29_18J , MODEL:CPBG34_18J **(22/08/2018 - ...)**	
	• 1079 9903 48	1	WARNING LABEL		
	• 1627 1828 00	1	DECAL WARNING		
2020	2202 7706 00	2	SUPPORT	**(21/08/2018 - 21/08/2018)** MODEL:CPBG25_18J , MODEL:CPBG29_18J , MODEL:CPBG34_18J **(22/08/2018 - ...)**	
2030	0129 3270 40	9	BLIND RIVET	**(21/08/2018 - 21/08/2018)** MODEL:CPBG25_18J , MODEL:CPBG29_18J , MODEL:CPBG34_18J **(22/08/2018 - ...)**	
2040	0348 0110 03	1	ANCHOR PLATE	**(21/08/2018 - 21/08/2018)** MODEL:CPBG25_18J , MODEL:CPBG29_18J , MODEL:CPBG34_18J **(22/08/2018 - ...)**	
3010	2204 2073 01	1	SUPPORT	**(21/08/2018 - 21/08/2018)** MODEL:CPBG25_18J , MODEL:CPBG29_18J , MODEL:CPBG34_18J **(22/08/2018 - ...)**	
3020	2204 2134 43	1	LDI DRAIN	**(15/01/2019 - ...)**	
	• 0663 9096 00	1	O-RING		
	• 2200 9020 17	1	KIT WEAR DRAIN		
	• 2902 0161 02	1	FILTER MESH LD20X - ED12		
3030	0070 6002 49	2	PLASTIC TUBE	**(04/10/2018 - ...)**	

Legend:

EAPPR:IEC - Electrical approval:IEC
FREQ:50HZ - Frequency:50 Hz
IDRY:Y - Integrated dryer:Yes
MAPPR:AS1210 - Pressure Vessel Approval:AS1210
MAPPR:CE - Pressure Vessel Approval:CE
MAPPR:MOM - Pressure Vessel Approval:MOM
MAPPR:SA - Pressure Vessel Approval:SA
MODEL:CPBG25_18J - Model:CPBg 25
MODEL:CPBG29_18J - Model:CPBg 29
MODEL:CPBG34_18J - Model:CPBg 34
MODEL:CPVD25_18J - Model:CPVSd 25
MODEL:CPVD29_18J - Model:CPVSd 29
MODEL:CPVD34_18J - Model:CPVSd 34

31.6 - Components CPBg 25, CPVSd 25, CPBg 29, CPVSd 29, CPBg 34, CPVSd 34 - IEC - 50Hz - AS1210, CE, MOM, SA

(MAPPR:AS1210 , MAPPR:CE , MAPPR:MOM , MAPPR:SA) + (MODEL:CPBG25_18J , MODEL:CPBG29_18J , MODEL:CPBG34_18J , MODEL:CPVD25_18J , MODEL:CPVD29_18J , MODEL:CPVD34_18J) + EAPPR:IEC + FREQ:50HZ + IDRY:Y

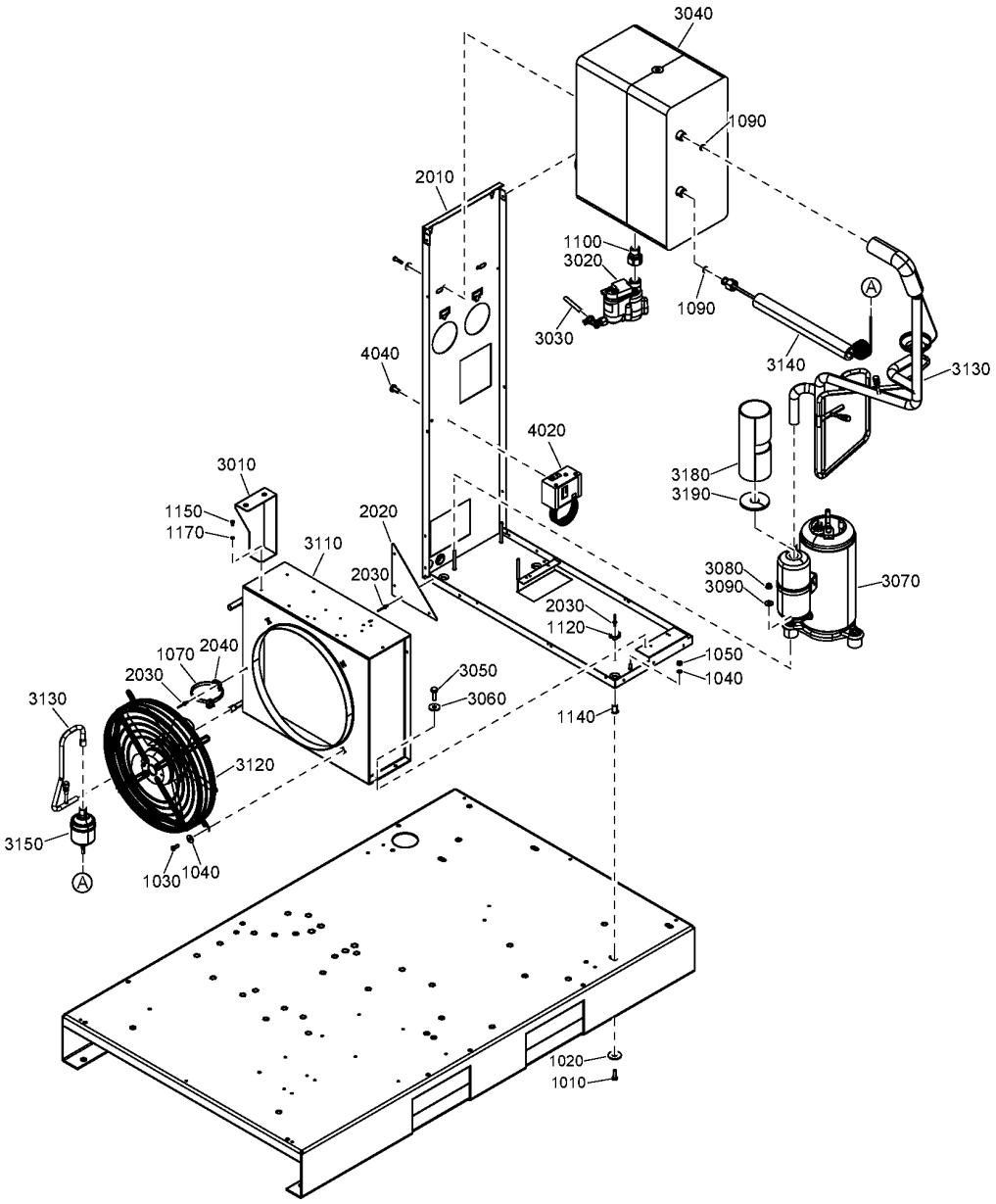

31.6 - Components CPBg 25, CPVSd 25, CPBg 29, CPVSd 29, CPBg 34, CPVSd 34 - IEC - 50Hz - AS1210, CE, MOM, SA

(MAPPR:AS1210 , MAPPR:CE , MAPPR:MOM , MAPPR:SA) + (MODEL:CPBG25_18J , MODEL:CPBG29_18J , MODEL:CPBG34_18J , MODEL:CPVD25_18J , MODEL:CPVD29_18J , MODEL:CPVD34_18J) + EAPPR:IEC + FREQ:50HZ + IDRY:Y

Ref	Part Number	Qty	Name	Validity	R.
3040	2204 1847 81	1	HEAT EXCHANGER	**(21/08/2018 - 21/08/2018)** MODEL:CPBG25_18J , MODEL:CPBG29_18J , MODEL:CPBG34_18J **(22/08/2018 - ...)**	
3050	0147 1325 03	4	HEXAGON HEAD SCREW	**(21/08/2018 - 21/08/2018)** MODEL:CPBG25_18J , MODEL:CPBG29_18J , MODEL:CPBG34_18J **(22/08/2018 - ...)**	
3060	0300 8019 00	4	PLAIN WASHER	**(21/08/2018 - 21/08/2018)** MODEL:CPBG25_18J , MODEL:CPBG29_18J , MODEL:CPBG34_18J **(22/08/2018 - ...)**	
3070	1624 2616 01	1	COMPRESSOR	**(21/08/2018 - 21/08/2018)** MODEL:CPBG25_18J , MODEL:CPBG29_18J , MODEL:CPBG34_18J **(22/08/2018 - ...)**	
	• 1624 2725 02	1	CAPACITOR		
3080	0291 1185 29	3	NUT	**(21/08/2018 - 21/08/2018)** MODEL:CPBG25_18J , MODEL:CPBG29_18J , MODEL:CPBG34_18J **(22/08/2018 - ...)**	
3090	0300 0274 64	3	WASHER	**(21/08/2018 - 21/08/2018)** MODEL:CPBG25_18J , MODEL:CPBG29_18J , MODEL:CPBG34_18J **(22/08/2018 - ...)**	
3110	2204 1678 01	1	CONDENSER	**(21/08/2018 - 21/08/2018)** MODEL:CPBG25_18J , MODEL:CPBG29_18J , MODEL:CPBG34_18J **(22/08/2018 - ...)**	
3120	2202 7373 02	1	FAN	**(21/08/2018 - 21/08/2018)** MODEL:CPBG25_18J , MODEL:CPBG29_18J **(22/08/2018 - ...)** MODEL:CPBG25_18J , MODEL:CPBG29_18J , MODEL:CPVD25_18J , MODEL:CPVD29_18J	
3120	1624 2917 84	1	FAN	**(21/08/2018 - 21/08/2018)** MODEL:CPBG34_18J **(22/08/2018 - ...)** MODEL:CPBG34_18J , MODEL:CPVD34_18J	
3130	2204 2085 80	1	PIPE ASSEMBLY	**(21/08/2018 - 21/08/2018)** MODEL:CPBG25_18J , MODEL:CPBG29_18J , MODEL:CPBG34_18J **(22/08/2018 - ...)**	
	• 1624 2486 02	1	HGB VALVE		
	• 2202 8516 00	3	SCHRADER VALVE	**(07/02/2019 - ...)**	
	•• 2204 1638 01	1	PIN		
3140	2202 7413 01	1	CAPILLARY	**(21/08/2018 - 21/08/2018)** MODEL:CPBG25_18J , MODEL:CPBG29_18J , MODEL:CPBG34_18J **(22/08/2018 - ...)**	
3150	2202 7898 01	1	FILTER DRYER	**(21/08/2018 - 21/08/2018)** MODEL:CPBG25_18J , MODEL:CPBG29_18J , MODEL:CPBG34_18J **(22/08/2018 - ...)**	
3180	1624 9614 00	1	INSULATION THERMAL	**(21/08/2018 - 21/08/2018)** MODEL:CPBG25_18J , MODEL:CPBG29_18J , MODEL:CPBG34_18J **(22/08/2018 - ...)**	
3190	1624 9710 00	1	INSULATION THERMAL	**(21/08/2018 - 21/08/2018)** MODEL:CPBG25_18J , MODEL:CPBG29_18J , MODEL:CPBG34_18J **(22/08/2018 - ...)**	
4020	1089 9139 25	1	FAN SWITCH	**(21/08/2018 - 21/08/2018)** MODEL:CPBG25_18J , MODEL:CPBG29_18J , MODEL:CPBG34_18J **(22/08/2018 - ...)**	
4040	0226 3256 00	2	SCREW	**(21/08/2018 - 21/08/2018)** MODEL:CPBG25_18J , MODEL:CPBG29_18J , MODEL:CPBG34_18J **(22/08/2018 - ...)**	

Legend:

EAPPR:IEC - Electrical approval:IEC
FREQ:50HZ - Frequency:50 Hz
IDRY:Y - Integrated dryer:Yes
MAPPR:AS1210 - Pressure Vessel Approval:AS1210
MAPPR:CE - Pressure Vessel Approval:CE
MAPPR:MOM - Pressure Vessel Approval:MOM
MAPPR:SA - Pressure Vessel Approval:SA
MODEL:CPBG25_18J - Model:CPBg 25
MODEL:CPBG29_18J - Model:CPBg 29
MODEL:CPBG34_18J - Model:CPBg 34
MODEL:CPVD25_18J - Model:CPVSd 25
MODEL:CPVD29_18J - Model:CPVSd 29
MODEL:CPVD34_18J - Model:CPVSd 34

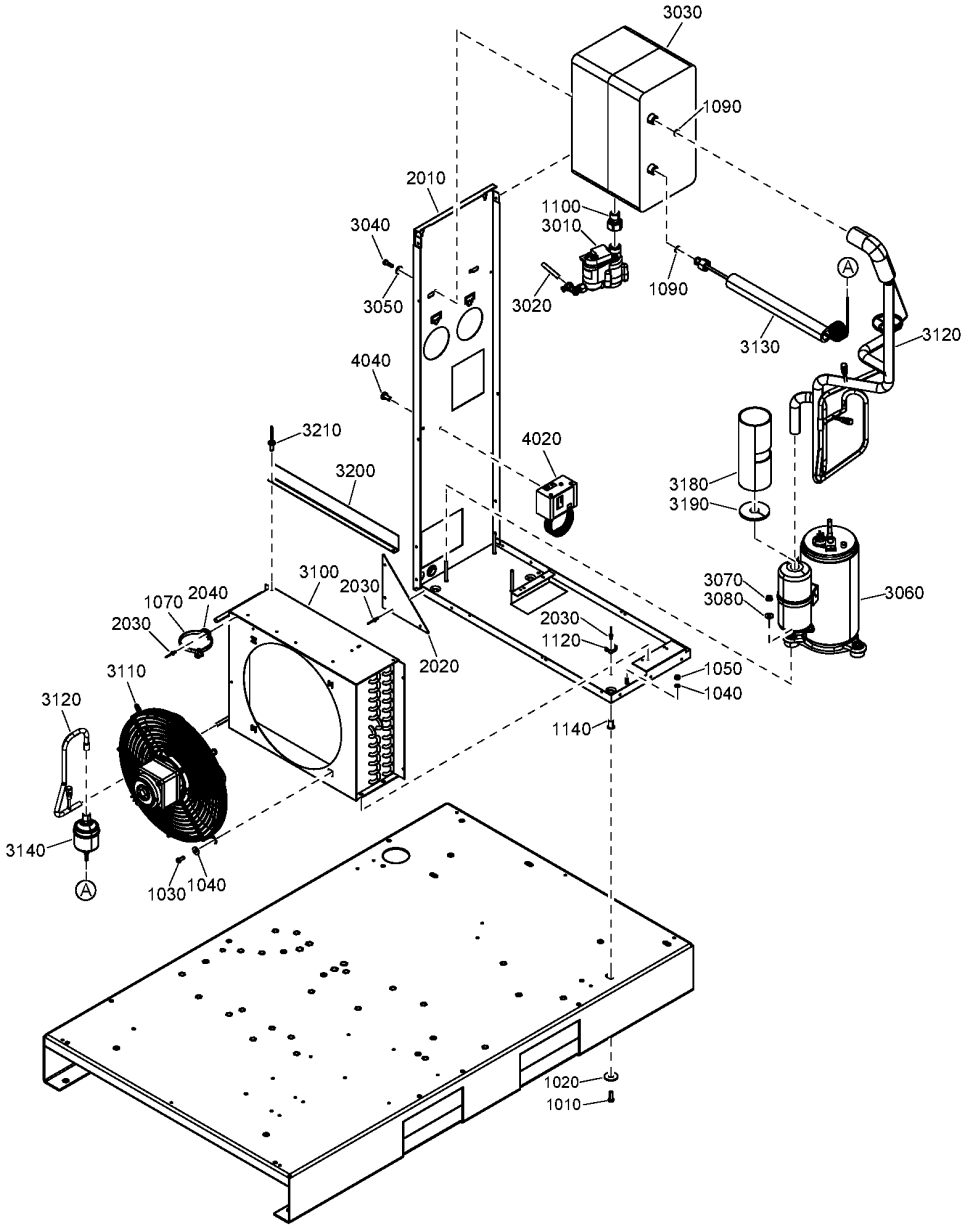
3030
1090
2010
1100
3010
3040
3050
3020
1090
3130
3120
4040
3210
4020
3200
3180
3190
3100
2030
3070
3080
3060
1070
2040
2030
2030
1120
2020
1050
1040
3110
3120
1140
3140
1030
1040
1020
1010

Ref	Part Number	Qty	Name	Validity	R.
	~~2200 9854 10~~	1	AIR DRYER	(22/08/2018 - ...)	
	Substituted by:	2200 9037 10 - E8V 230/60 2200985410 SPARE (quantity: 1)			
	Remarks:	Refrigerant R410A			
1010	0226 3256 00	3	SCREW	(21/08/2018 - 21/08/2018) (22/08/2018 - ...) MODEL:CPBG20_18J	
1020	0300 0274 70	3	WASHER	(21/08/2018 - 21/08/2018) (22/08/2018 - ...) MODEL:CPBG20_18J	
1030	0215 0003 91	4	SCREW	(21/08/2018 - 21/08/2018) (22/08/2018 - ...) MODEL:CPBG20_18J	
1040	0333 3220 00	2	WASHER	(05/12/2018 - ...)	
1050	0266 2108 00	2	HEXAGON NUT	(21/08/2018 - 21/08/2018) (22/08/2018 - ...) MODEL:CPBG20_18J	
1070	0348 0101 20	10	CABLE TIE	(21/08/2018 - 21/08/2018) (22/08/2018 - ...) MODEL:CPBG20_18J	
1090	2202 7425 01	2	RING	(21/08/2018 - 21/08/2018) (22/08/2018 - ...) MODEL:CPBG20_18J	
1100	2202 7703 01	1	PIPE FITTING	(21/08/2018 - 21/08/2018) (22/08/2018 - ...) MODEL:CPBG20_18J	
1120	0348 0110 03	2	ANCHOR PLATE	(21/08/2018 - 21/08/2018) (22/08/2018 - 30/12/2040) MODEL:CPBG20_18J	
1140	0298 1000 22	4	INSERT	(21/08/2018 - 21/08/2018) (22/08/2018 - ...) MODEL:CPBG20_18J	
2010	2204 2070 81	1	FRAME ASSEMBLY	(21/08/2018 - 21/08/2018) (22/08/2018 - ...) MODEL:CPBG20_18J	
	• 1079 9903 48	1	WARNING LABEL		
	• 1627 1828 00	1	DECAL WARNING		
2020	2202 7706 00	2	SUPPORT	(21/08/2018 - 21/08/2018) (22/08/2018 - ...) MODEL:CPBG20_18J	
2030	0129 3270 40	9	BLIND RIVET	(21/08/2018 - 21/08/2018) (22/08/2018 - ...) MODEL:CPBG20_18J	
2040	0348 0110 03	1	ANCHOR PLATE	(21/08/2018 - 21/08/2018) (22/08/2018 - ...) MODEL:CPBG20_18J	
3010	2204 2134 43	1	LDI DRAIN	(15/01/2019 - ...)	
	• 0663 9096 00	1	O-RING		
	• 2200 9020 17	1	KIT WEAR DRAIN		
	• 2902 0161 02	1	FILTER MESH LD20X - ED12		
3020	0070 6002 49	2	PLASTIC TUBE	(04/10/2018 - ...)	
3030	2204 1844 81	1	HEAT EXCHANGER	(21/08/2018 - 21/08/2018) (22/08/2018 - ...) MODEL:CPBG20_18J	
3040	0147 1247 03	2	HEXAGON BOLT	(21/08/2018 - 21/08/2018) (22/08/2018 - ...) MODEL:CPBG20_18J	
3050	0300 0274 64	2	WASHER	(21/08/2018 - 21/08/2018) (22/08/2018 - ...) MODEL:CPBG20_18J	
3060	1624 2616 14	1	COMPRESSOR	(21/08/2018 - 21/08/2018) (22/08/2018 - ...) MODEL:CPBG20_18J	
	• 1624 2725 01	1	CAPACITOR		
3070	0291 1185 29	3	NUT	(21/08/2018 - 21/08/2018) (22/08/2018 - ...) MODEL:CPBG20_18J	
3080	0300 0274 64	3	WASHER	(21/08/2018 - 21/08/2018) (22/08/2018 - ...) MODEL:CPBG20_18J	
3100	2204 2163 01	1	CONDENSOR	(21/08/2018 - 21/08/2018) (22/08/2018 - ...) MODEL:CPBG20_18J	
3110	2202 7373 05	1	MOTOR FAN	(21/08/2018 - 21/08/2018) (22/08/2018 - ...) MODEL:CPBG20_18J	
3120	2204 2062 80	1	PIPE ASSEMBLY	(21/08/2018 - 21/08/2018) (22/08/2018 - ...) MODEL:CPBG20_18J	
	• 2202 8516 00	3	SCHRADER VALVE	(07/02/2019 - ...)	
	•• 2204 1638 01	1	PIN		
3130	2202 7413 02	1	CAPILLARY	(21/08/2018 - 21/08/2018) (22/08/2018 - ...) MODEL:CPBG20_18J	
3140	2202 7898 01	1	FILTER DRYER	(21/08/2018 - 21/08/2018) (22/08/2018 - ...) MODEL:CPBG20_18J	
3180	1627 1843 00	1	INSULATION THERMAL	(21/08/2018 - 21/08/2018) (22/08/2018 - ...) MODEL:CPBG20_18J	
3190	1627 1844 00	1	INSULATION THERMAL	(21/08/2018 - 21/08/2018) (22/08/2018 - ...) MODEL:CPBG20_18J	
3200	1627 1679 00	1	BRACKET	(21/08/2018 - 21/08/2018) (22/08/2018 - ...) MODEL:CPBG20_18J	

Legend:

EAPPR:IEC - Electrical approval:IEC
FREQ:60HZ - Frequency:60 Hz
IDRY:Y - Integrated dryer:Yes
MAPPR:ASME - Pressure Vessel Approval:ASME (U Stamp)
MODEL:CPBG20_18J - Model:CPBg 20
MODEL:CPVD21_18J - Model:CPVSd 21

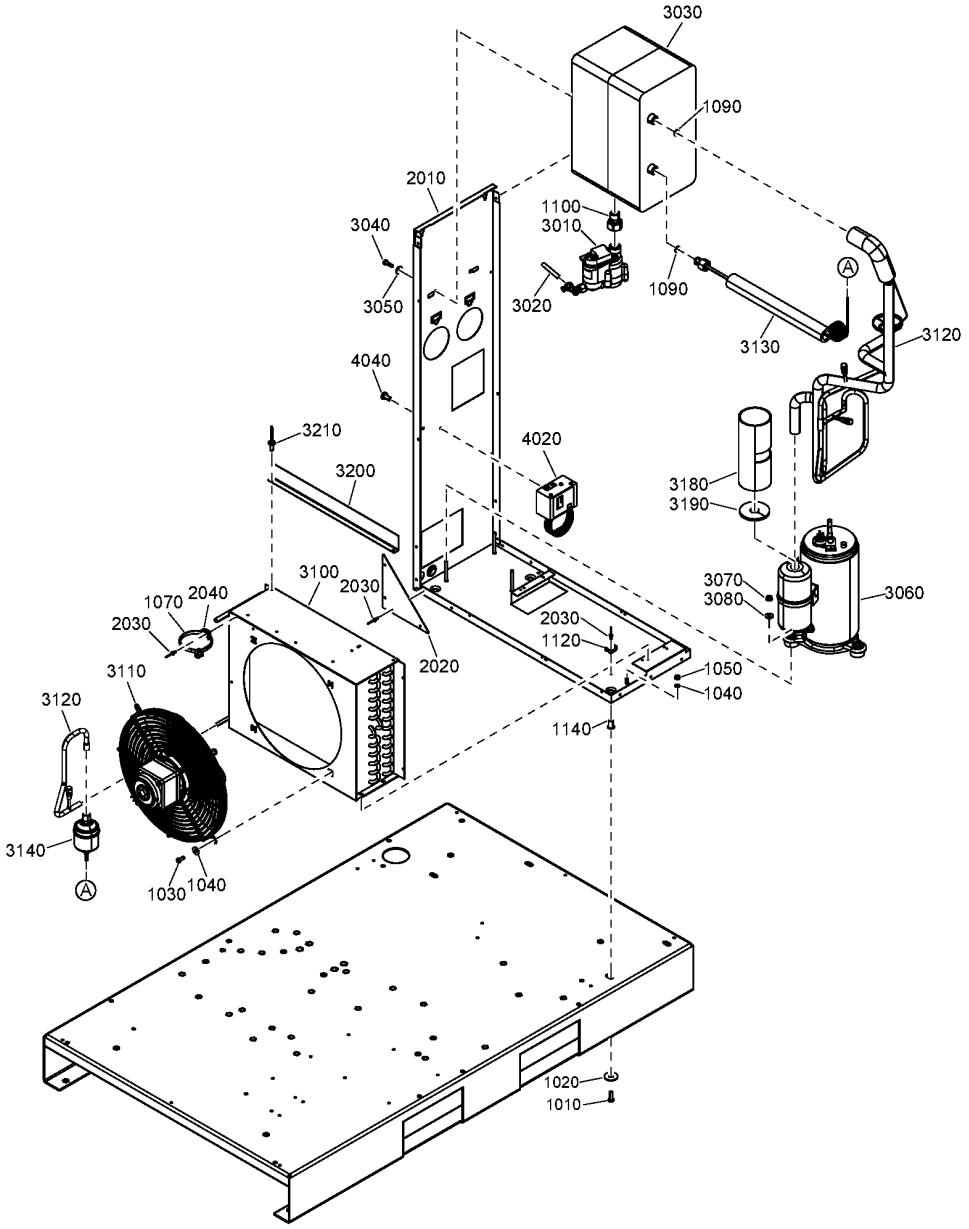
3030
1090
2010
1100
3010
3040
3050
3020
1090
3130
3120
4040
3210
4020
3200
3180
3190
3100
2030
3070
3080
3060
1070
2040
2030
2030
1120
2020
1050
1040
3110
3120
1140
3140
1030
1040
1020
1010

Ref	Part Number	Qty	Name	Validity	R.
3210	0129 3270 40	2	BLIND RIVET	**(05/12/2018 - ...)**	
4020	1089 9139 25	1	FAN SWITCH	**(21/08/2018 - 21/08/2018)** MODEL:CPBG20_18J **(22/08/2018 - ...)**	
4040	0226 3256 00	2	SCREW	**(21/08/2018 - 21/08/2018)** MODEL:CPBG20_18J **(22/08/2018 - ...)**	

Legend:

EAPPR:IEC - Electrical approval:IEC
FREQ:60HZ - Frequency:60 Hz
IDRY:Y - Integrated dryer:Yes
MAPPR:ASME - Pressure Vessel Approval:ASME (U Stamp)
MODEL:CPBG20_18J - Model:CPBg 20
MODEL:CPVD21_18J - Model:CPVSd 21

31.8 - Components CPBg 25, CPVSd 25, CPBg 29, CPVSd 29, CPBg 34, CPVSd 34 - IEC - 60Hz - ASME

(MODEL:CPBG25_18J , MODEL:CPBG29_18J , MODEL:CPBG34_18J , MODEL:CPVD25_18J , MODEL:CPVD29_18J , MODEL:CPVD34_18J) + EAPPR:IEC + FREQ:60HZ + IDRY:Y + MAPPR:ASME

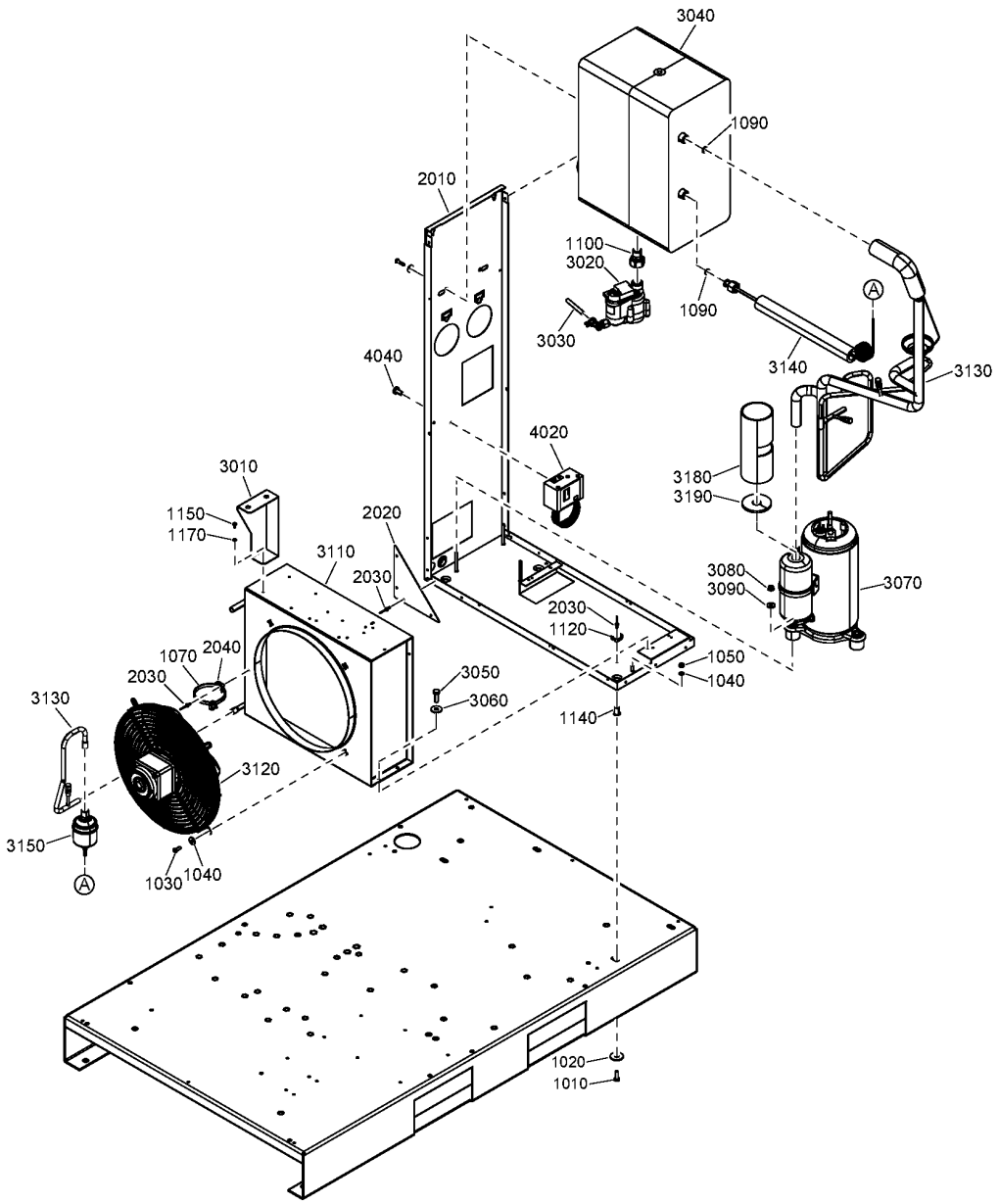

Ref	Part Number	Qty	Name	Validity	R.
	~~2200 9854 22~~	1	AIR DRYER	**(22/08/2018 - ...)** MODEL:CPBG25_18J , MODEL:CPBG29_18J , MODEL:CPVD25_18J , MODEL:CPVD29_18J	
	Substituted by:	2200 9037 22 - E8/9V 230/60 2200985422 SPARE (quantity: 1)			
	Remarks:	Refrigerant R410A			
	~~2200 9854 36~~	1	AIR DRYER	**(22/08/2018 - ...)** MODEL:CPBG34_18J , MODEL:CPVD34_18J	
	Substituted by:	2200 9037 36 - E8/9V 230/60 2200985436 SPARE (quantity: 1)			
	Remarks:	Refrigerant R410A			
1010	0226 3256 00	3	SCREW	**(21/08/2018 - 21/08/2018)** MODEL:CPBG25_18J , MODEL:CPBG29_18J , MODEL:CPBG34_18J **(22/08/2018 - ...)**	
1020	0300 0274 70	3	WASHER	**(21/08/2018 - 21/08/2018)** MODEL:CPBG25_18J , MODEL:CPBG29_18J , MODEL:CPBG34_18J **(22/08/2018 - ...)**	
1030	0215 0003 91	4	SCREW	**(21/08/2018 - 21/08/2018)** MODEL:CPBG25_18J , MODEL:CPBG29_18J , MODEL:CPBG34_18J **(22/08/2018 - ...)**	
1040	0333 3220 00	2	WASHER	**(05/12/2018 - ...)**	
1050	0266 2108 00	2	HEXAGON NUT	**(21/08/2018 - 21/08/2018)** MODEL:CPBG25_18J , MODEL:CPBG29_18J , MODEL:CPBG34_18J **(22/08/2018 - ...)**	
1070	0348 0101 20	10	CABLE TIE	**(21/08/2018 - 21/08/2018)** MODEL:CPBG25_18J , MODEL:CPBG29_18J , MODEL:CPBG34_18J **(22/08/2018 - ...)**	
1090	2202 7425 01	2	RING	**(21/08/2018 - 21/08/2018)** MODEL:CPBG25_18J , MODEL:CPBG29_18J , MODEL:CPBG34_18J **(22/08/2018 - ...)**	
1100	2202 7703 01	1	PIPE FITTING	**(21/08/2018 - 21/08/2018)** MODEL:CPBG25_18J , MODEL:CPBG29_18J , MODEL:CPBG34_18J **(22/08/2018 - ...)**	
1120	0348 0110 03	2	ANCHOR PLATE	**(21/08/2018 - 21/08/2018)** MODEL:CPBG25_18J , MODEL:CPBG29_18J , MODEL:CPBG34_18J **(22/08/2018 - 30/12/2040)**	
1140	0298 1000 22	4	INSERT	**(21/08/2018 - 21/08/2018)** MODEL:CPBG25_18J , MODEL:CPBG29_18J , MODEL:CPBG34_18J **(22/08/2018 - ...)**	
1150	0147 1169 03	1	HEXAGON HEAD SCREW	**(21/08/2018 - 21/08/2018)** MODEL:CPBG25_18J , MODEL:CPBG29_18J , MODEL:CPBG34_18J **(22/08/2018 - ...)**	
1170	0333 3114 00	1	WASHER	**(21/08/2018 - 21/08/2018)** MODEL:CPBG25_18J , MODEL:CPBG29_18J , MODEL:CPBG34_18J **(22/08/2018 - ...)**	
2010	2204 2070 81	1	FRAME	**(21/08/2018 - 21/08/2018)** MODEL:CPBG25_18J , MODEL:CPBG29_18J , MODEL:CPBG34_18J **(22/08/2018 - ...)**	
	• 1079 9903 48	1	WARNING LABEL		
	• 1627 1828 00	1	DECAL WARNING		
2020	2202 7706 00	2	SUPPORT	**(21/08/2018 - 21/08/2018)** MODEL:CPBG25_18J , MODEL:CPBG29_18J , MODEL:CPBG34_18J **(22/08/2018 - ...)**	
2030	0129 3270 40	9	BLIND RIVET	**(21/08/2018 - 21/08/2018)** MODEL:CPBG25_18J , MODEL:CPBG29_18J , MODEL:CPBG34_18J **(22/08/2018 - ...)**	
2040	0348 0110 03	1	ANCHOR PLATE	**(21/08/2018 - 21/08/2018)** MODEL:CPBG25_18J , MODEL:CPBG29_18J , MODEL:CPBG34_18J **(22/08/2018 - ...)**	
3010	2204 2073 01	1	SUPPORT	**(21/08/2018 - 21/08/2018)** MODEL:CPBG25_18J , MODEL:CPBG29_18J , MODEL:CPBG34_18J **(22/08/2018 - ...)**	
3020	2204 2134 43	1	LDI DRAIN	**(15/01/2019 - ...)**	
	• 0663 9096 00	1	O-RING		
	• 2200 9020 17	1	KIT WEAR DRAIN		
	• 2902 0161 02	1	FILTER MESH LD20X - ED12		
3030	0070 6002 49	2	PLASTIC TUBE	**(04/10/2018 - ...)**	
3040	2204 1847 81	1	HEAT EXCHANGER	**(21/08/2018 - 21/08/2018)** MODEL:CPBG25_18J , MODEL:CPBG29_18J , MODEL:CPBG34_18J **(22/08/2018 - ...)**	

Legend:

EAPPR:IEC - Electrical approval:IEC
FREQ:60HZ - Frequency:60 Hz
IDRY:Y - Integrated dryer:Yes
MAPPR:ASME - Pressure Vessel Approval:ASME (U Stamp)
MODEL:CPBG25_18J - Model:CPBg 25
MODEL:CPBG29_18J - Model:CPBg 29
MODEL:CPBG34_18J - Model:CPBg 34
MODEL:CPVD25_18J - Model:CPVSd 25
MODEL:CPVD29_18J - Model:CPVSd 29
MODEL:CPVD34_18J - Model:CPVSd 34

31.8 - Components CPBg 25, CPVSd 25, CPBg 29, CPVSd 29, CPBg 34, CPVSd 34 - IEC - 60Hz - ASME

(MODEL:CPBG25_18J , MODEL:CPBG29_18J , MODEL:CPBG34_18J , MODEL:CPVD25_18J , MODEL:CPVD29_18J , MODEL:CPVD34_18J) + EAPPR:IEC + FREQ:60HZ + IDRY:Y + MAPPR:ASME

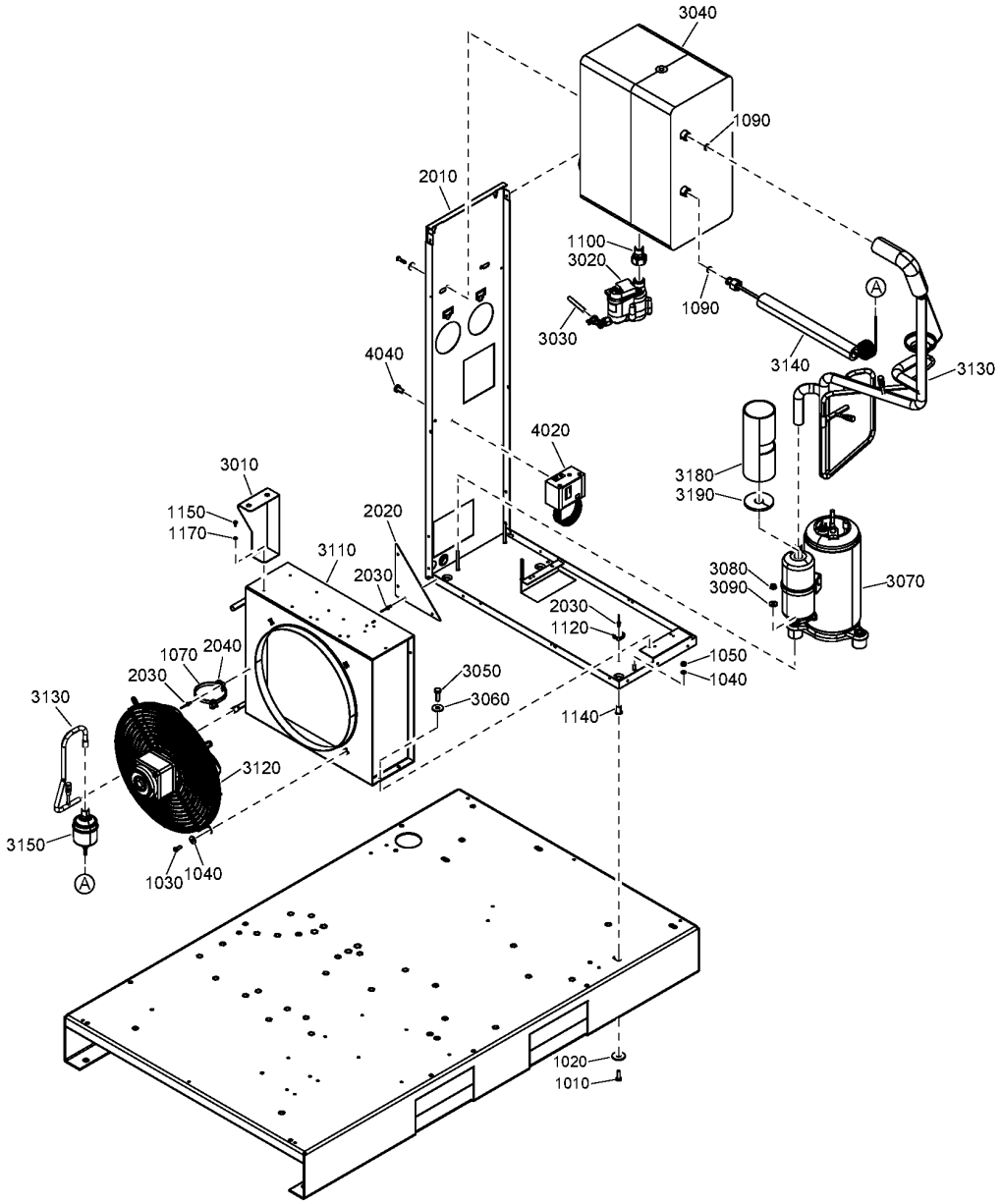

31.8 - Components CPBg 25, CPVSd 25, CPBg 29, CPVSd 29, CPBg 34, CPVSd 34 - IEC - 60Hz - ASME

(MODEL:CPBG25_18J , MODEL:CPBG29_18J , MODEL:CPBG34_18J , MODEL:CPVD25_18J , MODEL:CPVD29_18J , MODEL:CPVD34_18J) + EAPPR:IEC + FREQ:60HZ + IDRY:Y + MAPPR:ASME

Ref	Part Number	Qty	Name	Validity	R.
3050	0147 1325 03	4	HEXAGON HEAD SCREW	**(21/08/2018 - 21/08/2018)** MODEL:CPBG25_18J , MODEL:CPBG29_18J , MODEL:CPBG34_18J **(22/08/2018 - ...)**	
3060	0300 8019 00	4	PLAIN WASHER	**(21/08/2018 - 21/08/2018)** MODEL:CPBG25_18J , MODEL:CPBG29_18J , MODEL:CPBG34_18J **(22/08/2018 - ...)**	
3070	1624 2616 03	1	COMPRESSOR	**(21/08/2018 - 21/08/2018)** MODEL:CPBG25_18J , MODEL:CPBG29_18J , MODEL:CPBG34_18J **(22/08/2018 - ...)**	
	• 1624 2725 02	1	CAPACITOR		
3080	0291 1185 29	3	NUT	**(21/08/2018 - 21/08/2018)** MODEL:CPBG25_18J , MODEL:CPBG29_18J , MODEL:CPBG34_18J **(22/08/2018 - ...)**	
3090	0300 0274 64	3	WASHER	**(21/08/2018 - 21/08/2018)** MODEL:CPBG25_18J , MODEL:CPBG29_18J , MODEL:CPBG34_18J **(22/08/2018 - ...)**	
3110	2204 1678 01	1	CONDENSER	**(21/08/2018 - 21/08/2018)** MODEL:CPBG25_18J , MODEL:CPBG29_18J , MODEL:CPBG34_18J **(22/08/2018 - ...)**	
3120	1624 2917 84	1	FAN	**(21/08/2018 - 21/08/2018)** MODEL:CPBG34_18J **(22/08/2018 - ...)** MODEL:CPBG34_18J , MODEL:CPVD34_18J	
3120	2202 7373 05	1	FAN	**(21/08/2018 - 21/08/2018)** MODEL:CPBG25_18J , MODEL:CPBG29_18J **(22/08/2018 - ...)** MODEL:CPBG25_18J , MODEL:CPBG29_18J , MODEL:CPVD25_18J , MODEL:CPVD29_18J	
3130	2204 2085 80	1	PIPE ASSEMBLY	**(21/08/2018 - 21/08/2018)** MODEL:CPBG25_18J , MODEL:CPBG29_18J , MODEL:CPBG34_18J **(22/08/2018 - ...)**	
	• 1624 2486 02	1	HGB VALVE		
	• 2202 8516 00	3	SCHRADER VALVE	**(07/02/2019 - ...)**	
	•• 2204 1638 01	1	PIN		
3140	2202 7413 02	1	CAPILLARY	**(21/08/2018 - 21/08/2018)** MODEL:CPBG25_18J , MODEL:CPBG29_18J , MODEL:CPBG34_18J **(22/08/2018 - ...)**	
3150	2202 7898 01	1	FILTER DRYER	**(21/08/2018 - 21/08/2018)** MODEL:CPBG25_18J , MODEL:CPBG29_18J , MODEL:CPBG34_18J **(22/08/2018 - ...)**	
3180	1624 9614 00	1	INSULATION THERMAL	**(21/08/2018 - 21/08/2018)** MODEL:CPBG25_18J , MODEL:CPBG29_18J , MODEL:CPBG34_18J **(22/08/2018 - ...)**	
3190	1624 9710 00	1	INSULATION THERMAL	**(21/08/2018 - 21/08/2018)** MODEL:CPBG25_18J , MODEL:CPBG29_18J , MODEL:CPBG34_18J **(22/08/2018 - ...)**	
4020	1089 9139 25	1	FAN SWITCH	**(21/08/2018 - 21/08/2018)** MODEL:CPBG25_18J , MODEL:CPBG29_18J , MODEL:CPBG34_18J **(22/08/2018 - ...)**	
4040	0226 3256 00	2	SCREW	**(21/08/2018 - 21/08/2018)** MODEL:CPBG25_18J , MODEL:CPBG29_18J , MODEL:CPBG34_18J **(22/08/2018 - ...)**	

Legend:

EAPPR:IEC - Electrical approval:IEC
FREQ:60HZ - Frequency:60 Hz
IDRY:Y - Integrated dryer:Yes
MAPPR:ASME - Pressure Vessel Approval:ASME (U Stamp)
MODEL:CPBG25_18J - Model:CPBg 25
MODEL:CPBG29_18J - Model:CPBg 29
MODEL:CPBG34_18J - Model:CPBg 34
MODEL:CPVD25_18J - Model:CPVSd 25
MODEL:CPVD29_18J - Model:CPVSd 29
MODEL:CPVD34_18J - Model:CPVSd 34

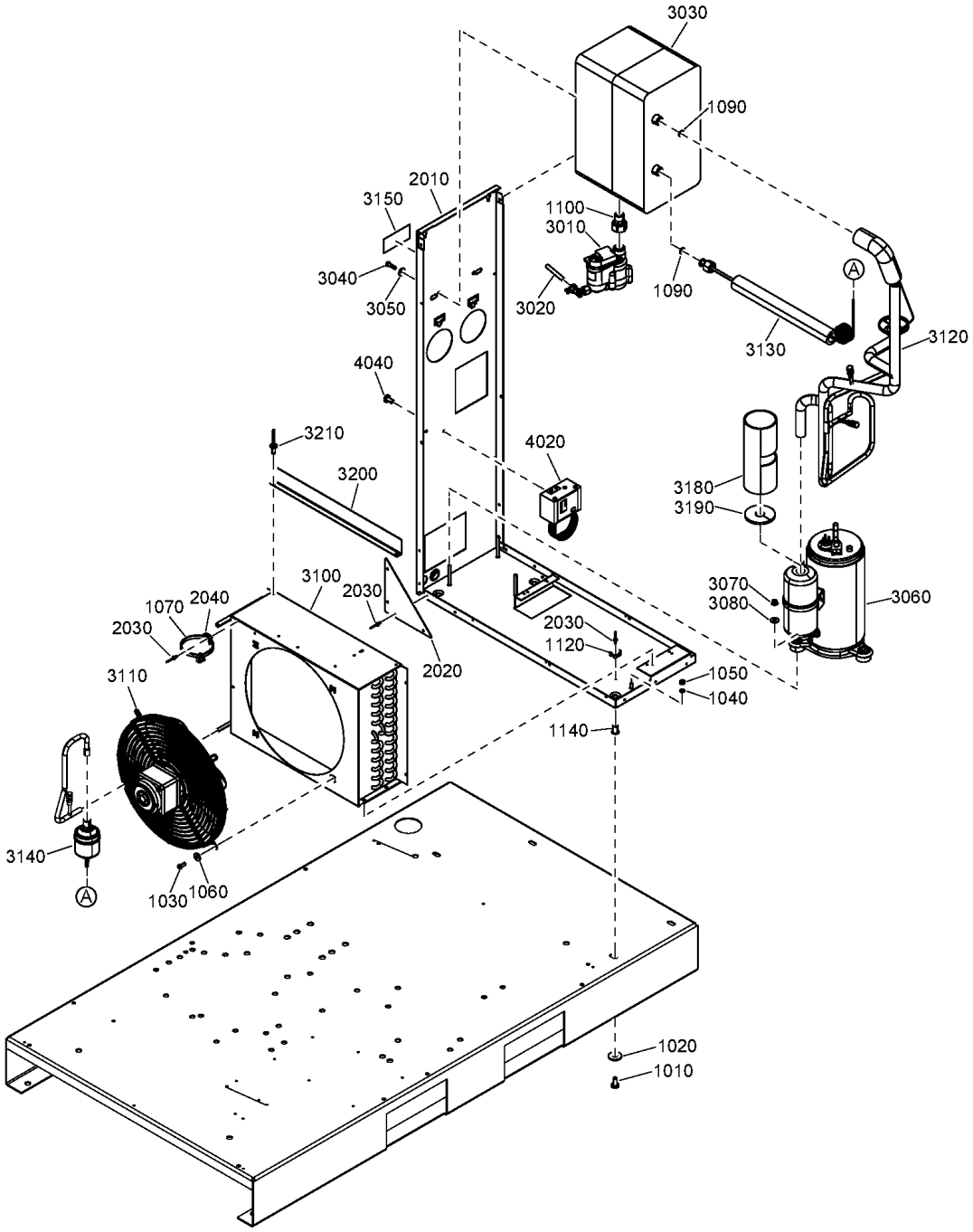
3030
1090
2010
3150
1100
3010
3040
3050
3020
1090
A
3130
3120
4040
3210
4020
3200
3180
3190
3100
2030
3070
3080
3060
1070
2040
2030
2030
1120
2020
1050
1040
3110
1140
3140
A
1030
1060
1020
1010

Ref	Part Number	Qty	Name	Validity	R.
	~~2200 9854 11~~	1	AIR DRYER	(22/08/2018 - ...)	
	Substituted by:	2200 9037 11 - E8V 115/60 2200985411 SPARE (quantity: 1)			
	Remarks:	Refrigerant R410A			
1010	0226 3256 00	3	SCREW	(21/08/2018 - 21/08/2018) (22/08/2018 - ...) MODEL:CPBG20_18J	
1020	0300 0274 70	3	WASHER	(21/08/2018 - 21/08/2018) (22/08/2018 - ...) MODEL:CPBG20_18J	
1030	0215 0003 91	4	SCREW	(21/08/2018 - 21/08/2018) (22/08/2018 - ...) MODEL:CPBG20_18J	
1040	0333 3220 00	2	WASHER	(05/12/2018 - ...)	
1050	0266 2108 00	2	HEXAGON NUT	(21/08/2018 - 21/08/2018) (22/08/2018 - ...) MODEL:CPBG20_18J	
1060	0300 0274 64	4	WASHER	(05/12/2018 - ...)	
1070	0348 0101 20	10	CABLE TIE	(21/08/2018 - 21/08/2018) (22/08/2018 - ...) MODEL:CPBG20_18J	
1090	2202 7425 01	2	RING	(21/08/2018 - 21/08/2018) (22/08/2018 - ...) MODEL:CPBG20_18J	
1100	2202 7703 01	1	PIPE FITTING	(21/08/2018 - 21/08/2018) (22/08/2018 - ...) MODEL:CPBG20_18J	
1120	0348 0110 03	2	ANCHOR PLATE	(21/08/2018 - 21/08/2018) (22/08/2018 - 30/12/2040) MODEL:CPBG20_18J	
1140	0298 1000 22	4	INSERT	(21/08/2018 - 21/08/2018) (22/08/2018 - ...) MODEL:CPBG20_18J	
2010	2204 2070 81	1	FRAME	(21/08/2018 - 21/08/2018) (22/08/2018 - ...) MODEL:CPBG20_18J	
	• 1079 9903 48	1	WARNING LABEL		
	• 1627 1828 00	1	DECAL WARNING		
2020	2202 7706 00	2	SUPPORT	(21/08/2018 - 21/08/2018) (22/08/2018 - ...) MODEL:CPBG20_18J	
2030	0129 3270 40	9	BLIND RIVET	(21/08/2018 - 21/08/2018) (22/08/2018 - ...) MODEL:CPBG20_18J	
2040	0348 0110 03	1	ANCHOR PLATE	(21/08/2018 - 21/08/2018) (22/08/2018 - ...) MODEL:CPBG20_18J	
3010	2204 2134 44	1	LDI DRAIN	(15/01/2019 - ...)	
	• 0663 9096 00	1	O-RING		
	• 2200 9020 17	1	KIT WEAR DRAIN		
	• 2902 0161 02	1	FILTER MESH LD20X - ED12		
3020	0070 6002 49	2	PLASTIC TUBE	(04/10/2018 - ...)	
3030	2204 1844 81	1	HEAT EXCHANGER	(21/08/2018 - 21/08/2018) (22/08/2018 - ...) MODEL:CPBG20_18J	
3040	0147 1247 03	2	HEXAGON BOLT	(21/08/2018 - 21/08/2018) (22/08/2018 - ...) MODEL:CPBG20_18J	
3050	0300 0274 64	2	WASHER	(21/08/2018 - 21/08/2018) (22/08/2018 - ...) MODEL:CPBG20_18J	
3060	1624 2616 16	1	COMPRESSOR	(21/08/2018 - 21/08/2018) (22/08/2018 - ...) MODEL:CPBG20_18J	
	• 1624 2725 16	1	CAPACITOR		
3070	0291 1185 29	3	NUT	(21/08/2018 - 21/08/2018) (22/08/2018 - ...) MODEL:CPBG20_18J	
3080	0300 0274 64	3	WASHER	(21/08/2018 - 21/08/2018) (22/08/2018 - ...) MODEL:CPBG20_18J	
3100	2204 2163 01	1	CONDENSOR	(21/08/2018 - 21/08/2018) (22/08/2018 - ...) MODEL:CPBG20_18J	
3110	2202 7373 06	1	MOTOR FAN	(21/08/2018 - 21/08/2018) (22/08/2018 - ...) MODEL:CPBG20_18J	
3120	2204 2062 80	1	PIPE ASSEMBLY	(21/08/2018 - 21/08/2018) (22/08/2018 - ...) MODEL:CPBG20_18J	
	• 1624 2486 03	1	HGB VALVE		
	• 2202 8516 00	3	SCHRADER VALVE	(07/02/2019 - ...)	
	•• 2204 1638 01	1	PIN		
3130	2202 7413 02	1	CAPILLARY	(21/08/2018 - 21/08/2018) (22/08/2018 - ...) MODEL:CPBG20_18J	
3140	2202 7898 01	1	FILTER DRYER	(21/08/2018 - 21/08/2018) (22/08/2018 - ...) MODEL:CPBG20_18J	
3150	2202 2611 92	1	LABEL	(21/08/2018 - 21/08/2018) (22/08/2018 - ...) MODEL:CPBG20_18J	

Legend:

EAPPR:ULCUL - Electrical approval:UL/cUL
FREQ:60HZ - Frequency:60 Hz
IDRY:Y - Integrated dryer:Yes
MAPPR:ASME - Pressure Vessel Approval:ASME (U Stamp)
MODEL:CPBG20_18J - Model:CPBg 20
MODEL:CPVD21_18J - Model:CPVSd 21

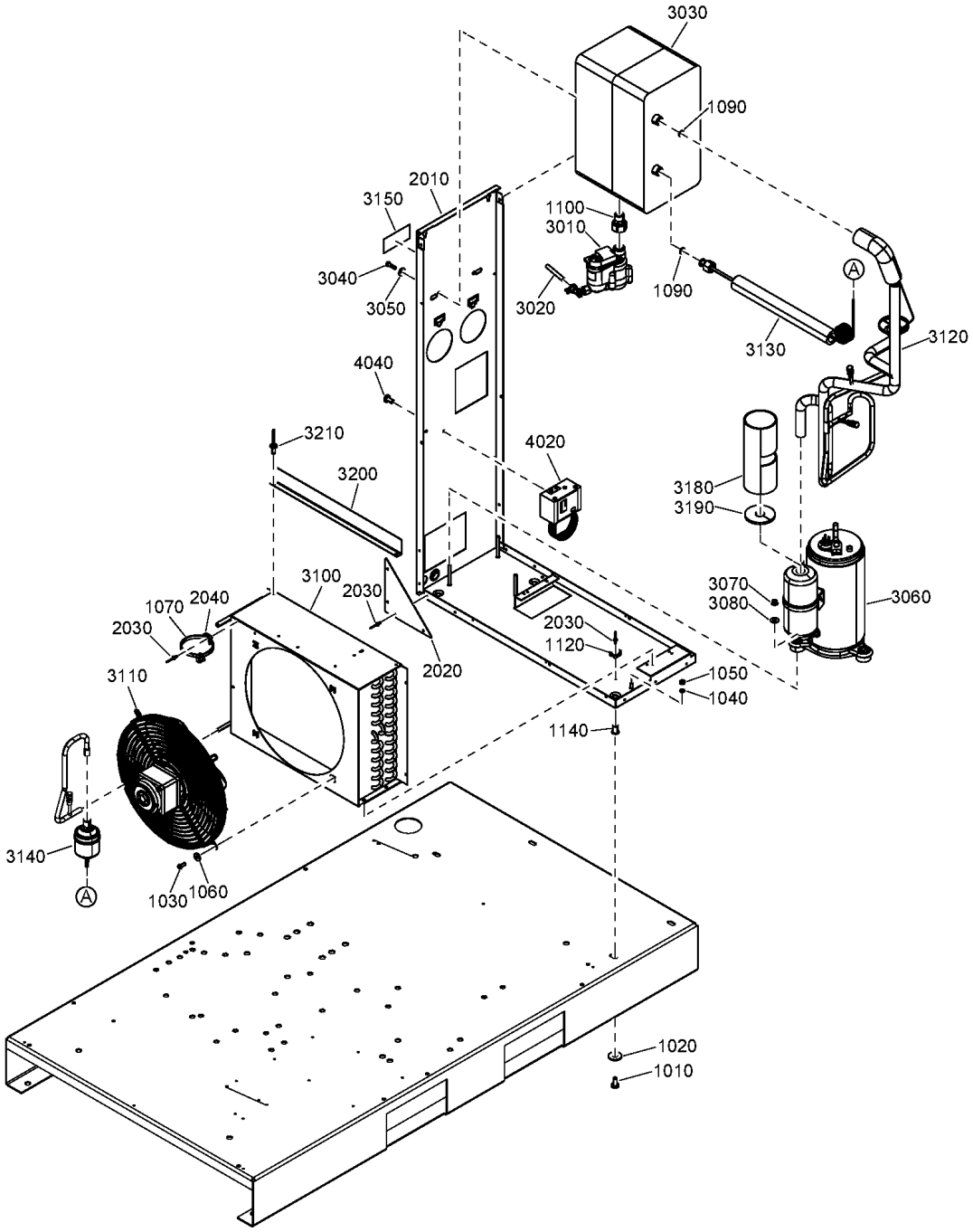
3030
1090
2010
3150
1100
3010
3040
3050
3020
1090
A
3130
3120
4040
3210
4020
3200
3180
3190
3100
2030
3070
3080
3060
1070
2040
2030
2030
1120
2020
1050
1040
3110
1140
3140
A
1030
1060
1020
1010

Ref	Part Number	Qty	Name	Validity	R.
3180	1627 1843 00	1	INSULATION THERMAL	**(21/08/2018 - 21/08/2018)** MODEL:CPBG20_18J **(22/08/2018 - ...)**	
3190	1627 1844 00	1	INSULATION THERMAL	**(21/08/2018 - 21/08/2018)** MODEL:CPBG20_18J **(22/08/2018 - ...)**	
3200	1627 1679 00	1	BRACKET	**(21/08/2018 - 21/08/2018)** MODEL:CPBG20_18J **(22/08/2018 - ...)**	
3210	0129 3270 40	2	BLIND RIVET	**(05/12/2018 - ...)**	
4020	1089 9139 25	1	FAN SWITCH	**(21/08/2018 - 21/08/2018)** MODEL:CPBG20_18J **(22/08/2018 - ...)**	
4040	0226 3256 00	2	SCREW	**(21/08/2018 - 21/08/2018)** MODEL:CPBG20_18J **(22/08/2018 - ...)**	

Legend:

EAPPR:ULCUL - Electrical approval:UL/cUL
FREQ:60HZ - Frequency:60 Hz
IDRY:Y - Integrated dryer:Yes
MAPPR:ASME - Pressure Vessel Approval:ASME (U Stamp)
MODEL:CPBG20_18J - Model:CPBg 20
MODEL:CPVD21_18J - Model:CPVSd 21

31.10 - Components CPBg 25, CVPSd 25, CPBg 29, CPVSd 29, CPBg 34, CPVSd 34 - UL-cUL - 60Hz - ASME

(MODEL:CPBG25_18J , MODEL:CPBG29_18J , MODEL:CPBG34_18J , MODEL:CPVD25_18J , MODEL:CPVD29_18J , MODEL:CPVD34_18J) + EAPPR:ULCUL + FREQ:60HZ + IDRY:Y + MAPPR:ASME

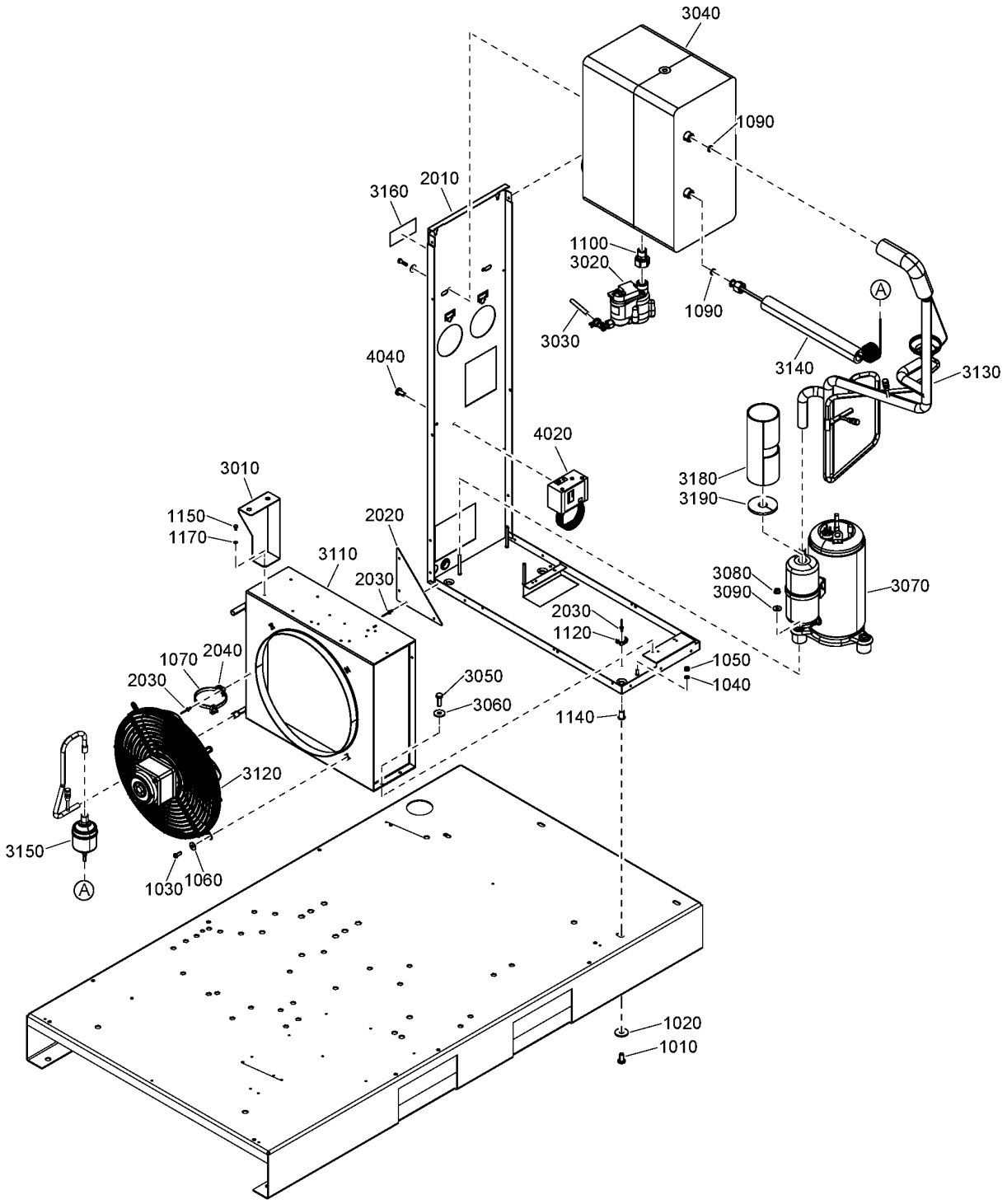

Ref	Part Number	Qty	Name	Validity	R.
	~~2200 9854 23~~ Substituted by: Remarks:	1 2200 9037 23 - E8/9V 115/60 2200985423 SPARE (quantity: 1) Refrigerant R410A	AIR DRYER	(22/08/2018 - ...)	
1010	0226 3256 00	3	SCREW	(21/08/2018 - 21/08/2018) MODEL:CPBG25_18J , MODEL:CPBG29_18J , MODEL:CPBG34_18J (22/08/2018 - ...)	
1020	0300 0274 70	3	WASHER	(21/08/2018 - 21/08/2018) MODEL:CPBG25_18J , MODEL:CPBG29_18J , MODEL:CPBG34_18J (22/08/2018 - ...)	
1030	0215 0003 91	4	SCREW	(21/08/2018 - 21/08/2018) MODEL:CPBG25_18J , MODEL:CPBG29_18J , MODEL:CPBG34_18J (22/08/2018 - ...)	
1040	0333 3220 00	2	WASHER	(05/12/2018 - ...)	
1050	0266 2108 00	2	HEXAGON NUT	(21/08/2018 - 21/08/2018) MODEL:CPBG25_18J , MODEL:CPBG29_18J , MODEL:CPBG34_18J (22/08/2018 - ...)	
1060	0300 0274 64	4	WASHER	(05/12/2018 - ...)	
1070	0348 0101 20	10	CABLE TIE	(21/08/2018 - 21/08/2018) MODEL:CPBG25_18J , MODEL:CPBG29_18J , MODEL:CPBG34_18J (22/08/2018 - ...)	
1090	2202 7425 01	2	RING	(21/08/2018 - 21/08/2018) MODEL:CPBG25_18J , MODEL:CPBG29_18J , MODEL:CPBG34_18J (22/08/2018 - ...)	
1100	2202 7703 01	1	PIPE FITTING	(21/08/2018 - 21/08/2018) MODEL:CPBG25_18J , MODEL:CPBG29_18J , MODEL:CPBG34_18J (22/08/2018 - ...)	
1120	0348 0110 03	2	ANCHOR PLATE	(21/08/2018 - 21/08/2018) MODEL:CPBG25_18J , MODEL:CPBG29_18J , MODEL:CPBG34_18J (22/08/2018 - 30/12/2040)	
1140	0298 1000 22	4	INSERT	(21/08/2018 - 21/08/2018) MODEL:CPBG25_18J , MODEL:CPBG29_18J , MODEL:CPBG34_18J (22/08/2018 - ...)	
1150	0147 1169 03	1	HEXAGON HEAD SCREW	(21/08/2018 - 21/08/2018) MODEL:CPBG25_18J , MODEL:CPBG29_18J , MODEL:CPBG34_18J (22/08/2018 - ...)	
1170	0333 3114 00	1	WASHER	(21/08/2018 - 21/08/2018) MODEL:CPBG25_18J , MODEL:CPBG29_18J , MODEL:CPBG34_18J (22/08/2018 - ...)	
2010	2204 2070 81	1	FRAME	(21/08/2018 - 21/08/2018) MODEL:CPBG25_18J , MODEL:CPBG29_18J , MODEL:CPBG34_18J (22/08/2018 - ...)	
	• 1079 9903 48	1	WARNING LABEL		
	• 1627 1828 00	1	DECAL WARNING		
2020	2202 7706 00	2	SUPPORT	(21/08/2018 - 21/08/2018) MODEL:CPBG25_18J , MODEL:CPBG29_18J , MODEL:CPBG34_18J (22/08/2018 - ...)	
2030	0129 3270 40	9	BLIND RIVET	(21/08/2018 - 21/08/2018) MODEL:CPBG25_18J , MODEL:CPBG29_18J , MODEL:CPBG34_18J (22/08/2018 - ...)	
2040	0348 0110 03	1	ANCHOR PLATE	(21/08/2018 - 21/08/2018) MODEL:CPBG25_18J , MODEL:CPBG29_18J , MODEL:CPBG34_18J (22/08/2018 - ...)	
3010	2204 2073 01	1	SUPPORT	(21/08/2018 - 21/08/2018) MODEL:CPBG25_18J , MODEL:CPBG29_18J , MODEL:CPBG34_18J (22/08/2018 - ...)	
3020	2204 2134 44	1	LDI DRAIN	(15/01/2019 - ...)	
	• 0663 9096 00	1	O-RING		
	• 2200 9020 17	1	KIT WEAR DRAIN		
	• 2902 0161 02	1	FILTER MESH LD20X - ED12		
3030	0070 6002 49	2	PLASTIC TUBE	(04/10/2018 - ...)	
3040	2204 1847 81	1	HEAT EXCHANGER	(21/08/2018 - 21/08/2018) MODEL:CPBG25_18J , MODEL:CPBG29_18J , MODEL:CPBG34_18J (22/08/2018 - ...)	
3050	0147 1325 03	4	HEXAGON HEAD SCREW	(21/08/2018 - 21/08/2018) MODEL:CPBG25_18J , MODEL:CPBG29_18J , MODEL:CPBG34_18J (22/08/2018 - ...)	

Legend:

EAPPR:ULCUL - Electrical approval:UL/cUL
FREQ:60HZ - Frequency:60 Hz
IDRY:Y - Integrated dryer:Yes
MAPPR:ASME - Pressure Vessel Approval:ASME (U Stamp)
MODEL:CPBG25_18J - Model:CPBg 25
MODEL:CPBG29_18J - Model:CPBg 29
MODEL:CPBG34_18J - Model:CPBg 34
MODEL:CPVD25_18J - Model:CPVSd 25
MODEL:CPVD29_18J - Model:CPVSd 29
MODEL:CPVD34_18J - Model:CPVSd 34

31.10 - Components CPBg 25, CVPSd 25, CPBg 29, CPVSd 29, CPBg 34, CPVSd 34 - UL-cUL - 60Hz - ASME

(MODEL:CPBG25_18J , MODEL:CPBG29_18J , MODEL:CPBG34_18J , MODEL:CPVD25_18J , MODEL:CPVD29_18J , MODEL:CPVD34_18J) + EAPPR:ULCUL + FREQ:60HZ + IDRY:Y + MAPPR:ASME

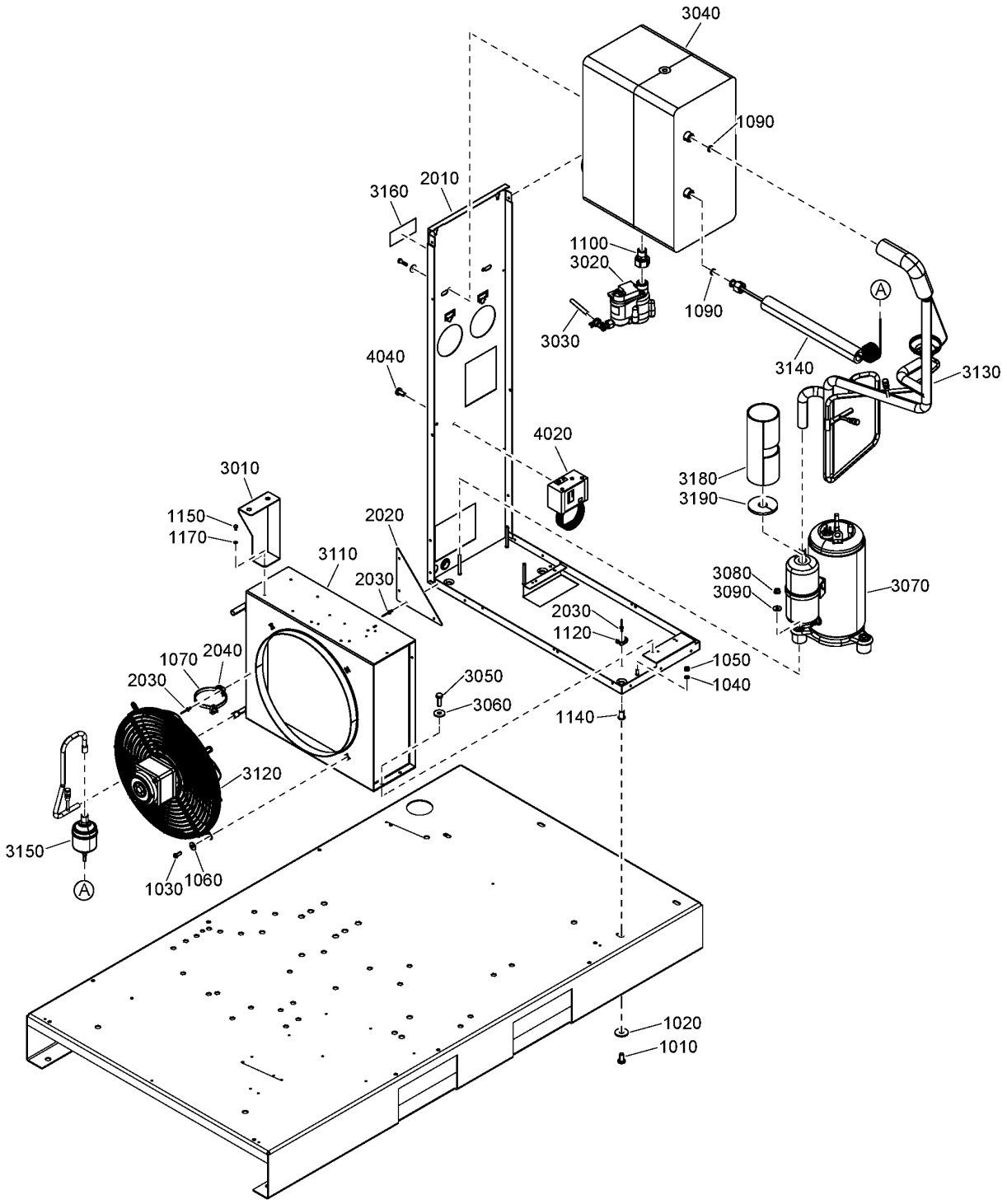

31.10 - Components CPBg 25, CVPSd 25, CPBg 29, CPVSd 29, CPBg 34, CPVSd 34 - UL-cUL - 60Hz - ASME

(MODEL:CPBG25_18J , MODEL:CPBG29_18J , MODEL:CPBG34_18J , MODEL:CPVD25_18J , MODEL:CPVD29_18J , MODEL:CPVD34_18J) + EAPPR:ULCUL + FREQ:60HZ + IDRY:Y + MAPPR:ASME

Ref	Part Number	Qty	Name	Validity	R.
3060	0300 8019 00	4	PLAIN WASHER	**(21/08/2018 - 21/08/2018)** MODEL:CPBG25_18J , MODEL:CPBG29_18J , MODEL:CPBG34_18J **(22/08/2018 - ...)**	
3070	1624 2616 18	1	COMPRESSOR	**(21/08/2018 - 21/08/2018)** MODEL:CPBG25_18J , MODEL:CPBG29_18J , MODEL:CPBG34_18J **(22/08/2018 - ...)**	
	• 1624 2725 16	1	CAPACITOR		
3080	0291 1185 29	3	NUT	**(21/08/2018 - 21/08/2018)** MODEL:CPBG25_18J , MODEL:CPBG29_18J , MODEL:CPBG34_18J **(22/08/2018 - ...)**	
3090	0300 0274 64	3	WASHER	**(21/08/2018 - 21/08/2018)** MODEL:CPBG25_18J , MODEL:CPBG29_18J , MODEL:CPBG34_18J **(22/08/2018 - ...)**	
3110	2204 1678 01	1	CONDENSER	**(21/08/2018 - 21/08/2018)** MODEL:CPBG25_18J , MODEL:CPBG29_18J , MODEL:CPBG34_18J **(22/08/2018 - ...)**	
3120	2202 7373 06	1	MOTOR FAN	**(21/08/2018 - 21/08/2018)** MODEL:CPBG25_18J , MODEL:CPBG29_18J , MODEL:CPBG34_18J **(22/08/2018 - ...)**	
3130	2204 2152 80	1	PIPE ASSEMBLY	**(21/08/2018 - 21/08/2018)** MODEL:CPBG25_18J , MODEL:CPBG29_18J , MODEL:CPBG34_18J **(22/08/2018 - ...)**	
	• 1624 2486 02	1	HGB VALVE		
	• 2202 8516 00	3	SCHRADER VALVE	**(07/02/2019 - ...)**	
	•• 2204 1638 01	1	PIN		
3140	2202 7413 01	1	CAPILLARY	**(21/08/2018 - 21/08/2018)** MODEL:CPBG25_18J , MODEL:CPBG29_18J , MODEL:CPBG34_18J **(22/08/2018 - ...)**	
3150	2202 7898 01	1	FILTER DRYER	**(21/08/2018 - 21/08/2018)** MODEL:CPBG25_18J , MODEL:CPBG29_18J , MODEL:CPBG34_18J **(22/08/2018 - ...)**	
3160	2202 2611 92	1	LABEL	**(21/08/2018 - 21/08/2018)** MODEL:CPBG25_18J , MODEL:CPBG29_18J , MODEL:CPBG34_18J **(22/08/2018 - ...)**	
3180	1627 1843 00	1	INSULATION THERMAL	**(21/08/2018 - 21/08/2018)** MODEL:CPBG25_18J , MODEL:CPBG29_18J , MODEL:CPBG34_18J **(22/08/2018 - ...)**	
3190	1627 1844 00	1	INSULATION THERMAL	**(21/08/2018 - 21/08/2018)** MODEL:CPBG25_18J , MODEL:CPBG29_18J , MODEL:CPBG34_18J **(22/08/2018 - ...)**	
4020	1089 9139 25	1	FAN SWITCH	**(21/08/2018 - 21/08/2018)** MODEL:CPBG25_18J , MODEL:CPBG29_18J , MODEL:CPBG34_18J **(22/08/2018 - ...)**	
4040	0226 3256 00	2	SCREW	**(21/08/2018 - 21/08/2018)** MODEL:CPBG25_18J , MODEL:CPBG29_18J , MODEL:CPBG34_18J **(22/08/2018 - ...)**	

Legend:

EAPPR:ULCUL - Electrical approval:UL/cUL
FREQ:60HZ - Frequency:60 Hz
IDRY:Y - Integrated dryer:Yes
MAPPR:ASME - Pressure Vessel Approval:ASME (U Stamp)
MODEL:CPBG25_18J - Model:CPBg 25
MODEL:CPBG29_18J - Model:CPBg 29
MODEL:CPBG34_18J - Model:CPBg 34
MODEL:CPVD25_18J - Model:CPVSd 25
MODEL:CPVD29_18J - Model:CPVSd 29
MODEL:CPVD34_18J - Model:CPVSd 34

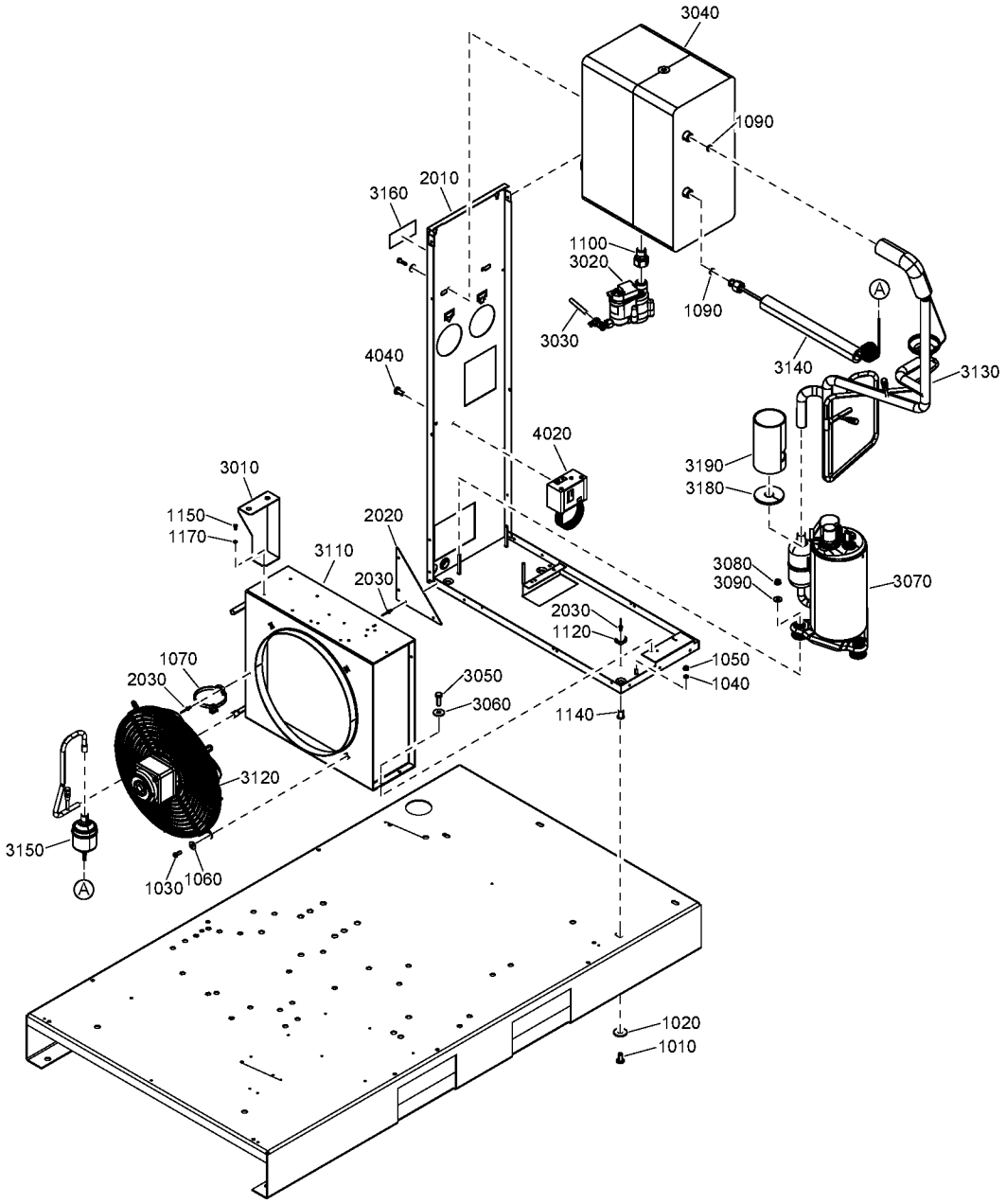
3040
1090
2010
3160
1100
3020
1090
3030
4040
3140
3130
4020
3190
3180
3010
1150
1170
2020
3110
2030
3080
3090
3070
2030
1120
1070
2030
3050
3060
1050
1040
1140
3120
3150
1030
1060
1020
1010

Ref	Part Number	Qty	Name	Validity	R.
	~~2200 9854 46~~ Substituted by: Remarks:	1 2200 9037 46 - E8/9V 230/60 2200985446 SPARE (quantity: 1) Refrigerant R134A	AIR DRYER	**(22/08/2018 - ...)**	
1010	0226 3256 00	3	SCREW	**(21/08/2018 - 21/08/2018)** MODEL:CPBG20_18J , MODEL:CPBG25_18J , MODEL:CPBG29_18J , MODEL:CPBG34_18J **(22/08/2018 - ...)**	
1020	0300 0274 70	3	WASHER	**(21/08/2018 - 21/08/2018)** MODEL:CPBG20_18J , MODEL:CPBG25_18J , MODEL:CPBG29_18J , MODEL:CPBG34_18J **(22/08/2018 - ...)**	
1030	0215 0003 91	4	SCREW	**(21/08/2018 - 21/08/2018)** MODEL:CPBG20_18J , MODEL:CPBG25_18J , MODEL:CPBG29_18J , MODEL:CPBG34_18J **(22/08/2018 - ...)**	
1040	0333 3220 00	2	WASHER	**(05/12/2018 - ...)**	
1050	0266 2108 00	2	HEXAGON NUT	**(21/08/2018 - 21/08/2018)** MODEL:CPBG20_18J , MODEL:CPBG25_18J , MODEL:CPBG29_18J , MODEL:CPBG34_18J **(22/08/2018 - ...)**	
1060	0300 0274 64	4	WASHER	**(05/12/2018 - ...)**	
1070	0348 0101 20	10	CABLE TIE	**(21/08/2018 - 21/08/2018)** MODEL:CPBG20_18J , MODEL:CPBG25_18J , MODEL:CPBG29_18J , MODEL:CPBG34_18J **(22/08/2018 - ...)**	
1090	2202 7425 01	2	RING	**(21/08/2018 - 21/08/2018)** MODEL:CPBG20_18J , MODEL:CPBG25_18J , MODEL:CPBG29_18J , MODEL:CPBG34_18J **(22/08/2018 - ...)**	
1100	2202 7703 01	1	PIPE FITTING	**(21/08/2018 - 21/08/2018)** MODEL:CPBG20_18J , MODEL:CPBG25_18J , MODEL:CPBG29_18J , MODEL:CPBG34_18J **(22/08/2018 - ...)**	
1120	0348 0110 03	2	ANCHOR PLATE	**(21/08/2018 - 21/08/2018)** MODEL:CPBG20_18J , MODEL:CPBG25_18J , MODEL:CPBG29_18J , MODEL:CPBG34_18J **(22/08/2018 - 30/12/2040)**	
1140	0298 1000 22	4	INSERT	**(21/08/2018 - 21/08/2018)** MODEL:CPBG20_18J , MODEL:CPBG25_18J , MODEL:CPBG29_18J , MODEL:CPBG34_18J **(22/08/2018 - ...)**	
1150	0147 1169 03	1	HEXAGON HEAD SCREW	**(21/08/2018 - 21/08/2018)** MODEL:CPBG20_18J , MODEL:CPBG25_18J , MODEL:CPBG29_18J , MODEL:CPBG34_18J **(22/08/2018 - ...)**	
1170	0333 3114 00	1	WASHER	**(21/08/2018 - 21/08/2018)** MODEL:CPBG20_18J , MODEL:CPBG25_18J , MODEL:CPBG29_18J , MODEL:CPBG34_18J **(22/08/2018 - ...)**	
2010	2204 2070 81	1	FRAME	**(21/08/2018 - 21/08/2018)** MODEL:CPBG20_18J , MODEL:CPBG25_18J , MODEL:CPBG29_18J , MODEL:CPBG34_18J **(22/08/2018 - ...)**	
	• 1079 9903 48	1	WARNING LABEL		
	• 1627 1828 00	1	DECAL WARNING		
2020	2202 7706 00	2	SUPPORT	**(21/08/2018 - 21/08/2018)** MODEL:CPBG20_18J , MODEL:CPBG25_18J , MODEL:CPBG29_18J , MODEL:CPBG34_18J **(22/08/2018 - ...)**	
2030	0129 3270 40	8	BLIND RIVET	**(21/08/2018 - 21/08/2018)** MODEL:CPBG20_18J , MODEL:CPBG25_18J , MODEL:CPBG29_18J , MODEL:CPBG34_18J **(22/08/2018 - ...)**	
3010	2204 2073 01	1	SUPPORT	**(21/08/2018 - 21/08/2018)** MODEL:CPBG20_18J , MODEL:CPBG25_18J , MODEL:CPBG29_18J , MODEL:CPBG34_18J **(22/08/2018 - ...)**	
3020	2204 2134 43	1	LDI DRAIN	**(15/01/2019 - ...)**	
	• 0663 9096 00	1	O-RING		
	• 2200 9020 17	1	KIT WEAR DRAIN		

Legend:

EAPPR:ULCUL - Electrical approval:UL/cUL
FREQ:60HZ - Frequency:60 Hz
IDRY:Y - Integrated dryer:Yes
MAPPR:CRNASME - Pressure Vessel Approval:CRN (based on ASME)
MODEL:CPBG20_18J - Model:CPBg 20
MODEL:CPBG25_18J - Model:CPBg 25
MODEL:CPBG29_18J - Model:CPBg 29
MODEL:CPBG34_18J - Model:CPBg 34

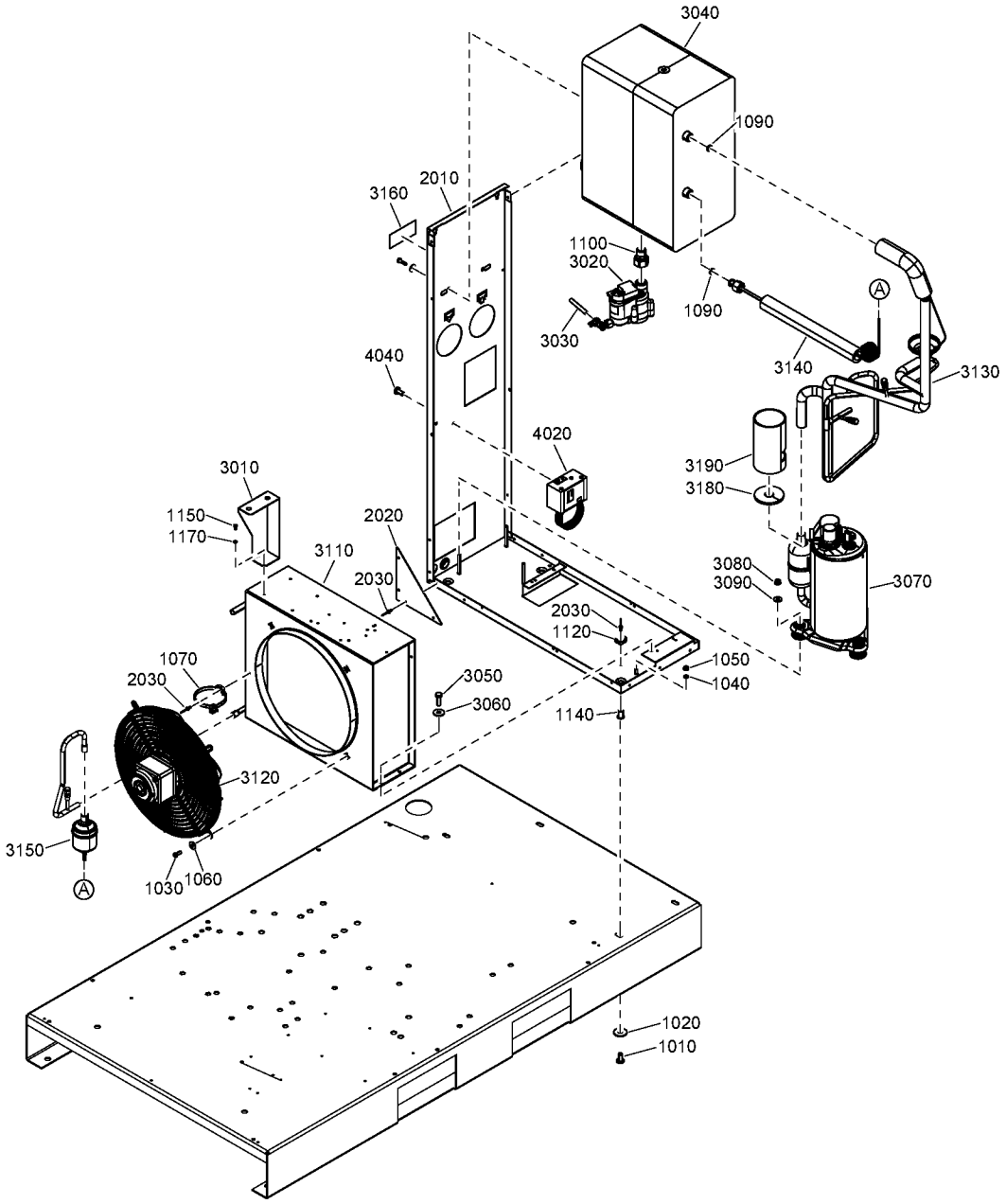
3040
1090
2010
3160
1100
3020
1090
3030
4040
3140
3130
4020
3190
3180
3010
1150
1170
2020
3110
2030
3080
3090
3070
2030
1120
1070
2030
3050
3060
1050
1040
1140
3120
3150
1030
1060
1020
1010

Ref	Part Number	Qty	Name	Validity	R.
	• 2902 0161 02	1	FILTER MESH LD20X - ED12		
3030	0070 6002 49	2	PLASTIC TUBE	**(04/10/2018 - ...)**	
3040	2204 1847 81	1	HEAT EXCHANGER	**(21/08/2018 - 21/08/2018)** MODEL:CPBG20_18J , MODEL:CPBG25_18J , MODEL:CPBG29_18J , MODEL:CPBG34_18J **(22/08/2018 - ...)**	
3050	0147 1325 03	4	HEXAGON HEAD SCREW	**(21/08/2018 - 21/08/2018)** MODEL:CPBG20_18J , MODEL:CPBG25_18J , MODEL:CPBG29_18J , MODEL:CPBG34_18J **(22/08/2018 - ...)**	
3060	0300 8019 00	4	PLAIN WASHER	**(21/08/2018 - 21/08/2018)** MODEL:CPBG20_18J , MODEL:CPBG25_18J , MODEL:CPBG29_18J , MODEL:CPBG34_18J **(22/08/2018 - ...)**	
3070	2204 2164 01	1	COMPRESSOR	**(21/08/2018 - 21/08/2018)** MODEL:CPBG20_18J , MODEL:CPBG25_18J , MODEL:CPBG29_18J , MODEL:CPBG34_18J **(22/08/2018 - ...)**	
3080	0291 1185 29	3	NUT	**(21/08/2018 - 21/08/2018)** MODEL:CPBG20_18J , MODEL:CPBG25_18J , MODEL:CPBG29_18J , MODEL:CPBG34_18J **(22/08/2018 - ...)**	
3090	0300 0274 64	3	WASHER	**(21/08/2018 - 21/08/2018)** MODEL:CPBG20_18J , MODEL:CPBG25_18J , MODEL:CPBG29_18J , MODEL:CPBG34_18J **(22/08/2018 - ...)**	
3110	2204 1678 01	1	CONDENSER	**(21/08/2018 - 21/08/2018)** MODEL:CPBG20_18J , MODEL:CPBG25_18J , MODEL:CPBG29_18J , MODEL:CPBG34_18J **(22/08/2018 - ...)**	
3120	2202 7373 05	1	MOTOR FAN	**(21/08/2018 - 21/08/2018)** MODEL:CPBG20_18J , MODEL:CPBG25_18J , MODEL:CPBG29_18J , MODEL:CPBG34_18J **(22/08/2018 - ...)**	
3130	2204 2165 80	1	PIPE ASSEMBLY	**(21/08/2018 - 21/08/2018)** MODEL:CPBG20_18J , MODEL:CPBG25_18J , MODEL:CPBG29_18J , MODEL:CPBG34_18J **(22/08/2018 - ...)**	
	• 1617 1524 02	1	HGB VALVE		
	• 2202 8516 00	4	SCHRADER VALVE		
	•• 2204 1638 01	1	PIN		
3140	2202 7413 08	1	CAPILLARY	**(21/08/2018 - 21/08/2018)** MODEL:CPBG20_18J , MODEL:CPBG25_18J , MODEL:CPBG29_18J , MODEL:CPBG34_18J **(22/08/2018 - ...)**	
3150	2202 7898 01	1	FILTER DRYER	**(21/08/2018 - 21/08/2018)** MODEL:CPBG20_18J , MODEL:CPBG25_18J , MODEL:CPBG29_18J , MODEL:CPBG34_18J **(22/08/2018 - ...)**	
3160	2202 2611 92	1	LABEL	**(21/08/2018 - 21/08/2018)** MODEL:CPBG20_18J , MODEL:CPBG25_18J , MODEL:CPBG29_18J , MODEL:CPBG34_18J **(22/08/2018 - ...)**	
3180	1624 9614 00	1	INSULATION THERMAL	**(21/08/2018 - 21/08/2018)** MODEL:CPBG20_18J , MODEL:CPBG25_18J , MODEL:CPBG29_18J , MODEL:CPBG34_18J **(22/08/2018 - ...)**	
3190	2204 2215 01	1	INSULATION	**(17/09/2018 - ...)**	
4020	1089 9139 35	1	FAN SWITCH	**(17/09/2018 - ...)**	
4040	0226 3256 00	2	SCREW	**(21/08/2018 - 21/08/2018)** MODEL:CPBG20_18J , MODEL:CPBG25_18J , MODEL:CPBG29_18J , MODEL:CPBG34_18J **(22/08/2018 - ...)**	

Legend:

EAPPR:ULCUL - Electrical approval:UL/cUL
FREQ:60HZ - Frequency:60 Hz
IDRY:Y - Integrated dryer:Yes
MAPPR:CRNASME - Pressure Vessel Approval:CRN (based on ASME)
MODEL:CPBG20_18J - Model:CPBg 20
MODEL:CPBG25_18J - Model:CPBg 25
MODEL:CPBG29_18J - Model:CPBg 29
MODEL:CPBG34_18J - Model:CPBg 34

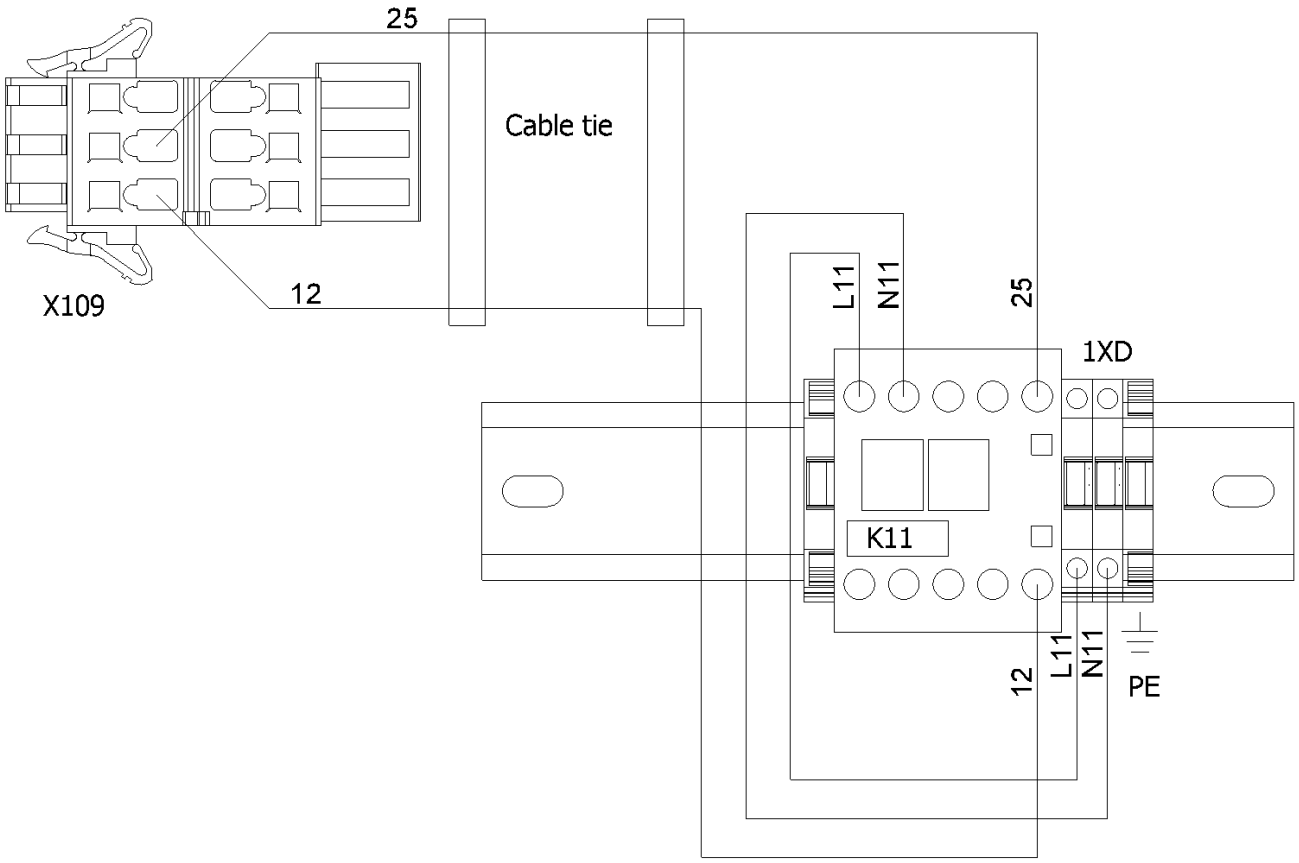
25
Cable tie
X109
12
L11
N11
25
1XD
K11
12
L11
N11
PE

31.12 - Dryer rail IEC - AS1210, CE, MOM, SA - 50Hz, ASME - 60Hz

((MAPPR:AS1210 , MAPPR:CE , MAPPR:MOM , MAPPR:SA) + FREQ:50HZ , FREQ:60HZ + MAPPR:ASME) + EAPPR:IEC + IDRY:Y

Ref	Part Number	Qty	Name	Validity	EL
	2205 0137 31	1	DRYER DIN RAIL		
	1089 9438 47	1	CONTACTOR	**(21/08/2018 - 21/08/2018)** MODEL:CPBG20_18J , MODEL:CPBG25_18J , MODEL:CPBG29_18J , MODEL:CPBG34_18J **(22/08/2018 - ...)**	K11
	1088 1510 40	2	TERMINAL	**(21/08/2018 - 21/08/2018)** MODEL:CPBG20_18J , MODEL:CPBG25_18J , MODEL:CPBG29_18J , MODEL:CPBG34_18J **(22/08/2018 - ...)**	1XD
	1088 1510 41	3	END SECTION	**(21/08/2018 - 21/08/2018)** MODEL:CPBG20_18J , MODEL:CPBG25_18J , MODEL:CPBG29_18J , MODEL:CPBG34_18J **(22/08/2018 - ...)**	
	~~1088 0031 81~~	2	END STOP	**(21/08/2018 - 21/08/2018)** MODEL:CPBG20_18J , MODEL:CPBG25_18J , MODEL:CPBG29_18J , MODEL:CPBG34_18J **(22/08/2018 - ...)**	
	Substituted by:	1089 0577 82 - END RETAINER (quantity: 1)			
	1088 1510 42	1	EARTH TERMINAL	**(21/08/2018 - 21/08/2018)** MODEL:CPBG20_18J , MODEL:CPBG25_18J , MODEL:CPBG29_18J , MODEL:CPBG34_18J **(22/08/2018 - ...)**	
	1088 0037 63	1	CONNECTOR	**(21/08/2018 - 21/08/2018)** MODEL:CPBG20_18J , MODEL:CPBG25_18J , MODEL:CPBG29_18J , MODEL:CPBG34_18J **(22/08/2018 - ...)**	X109
	2204 1227 51	1	SINGLE LINE LABEL	**(21/08/2018 - 21/08/2018)** MODEL:CPBG20_18J , MODEL:CPBG25_18J , MODEL:CPBG29_18J , MODEL:CPBG34_18J **(22/08/2018 - ...)**	
	2205 0137 30	1	SERVICE DIAGRAM	**(21/08/2018 - 21/08/2018)** MODEL:CPBG20_18J , MODEL:CPBG25_18J , MODEL:CPBG29_18J , MODEL:CPBG34_18J **(22/08/2018 - ...)**	

Legend:

EAPPR:IEC - Electrical approval:IEC
IDRY:Y - Integrated dryer:Yes
MAPPR:CE - Pressure Vessel Approval:CE
MODEL:CPBG20_18J - Model:CPBg 20
MODEL:CPBG34_18J - Model:CPBg 34
FREQ:50HZ - Frequency:50 Hz
MAPPR:AS1210 - Pressure Vessel Approval:AS1210
MAPPR:MOM - Pressure Vessel Approval:MOM
MODEL:CPBG25_18J - Model:CPBg 25
FREQ:60HZ - Frequency:60 Hz
MAPPR:ASME - Pressure Vessel Approval:ASME (U Stamp)
MAPPR:SA - Pressure Vessel Approval:SA
MODEL:CPBG29_18J - Model:CPBg 29

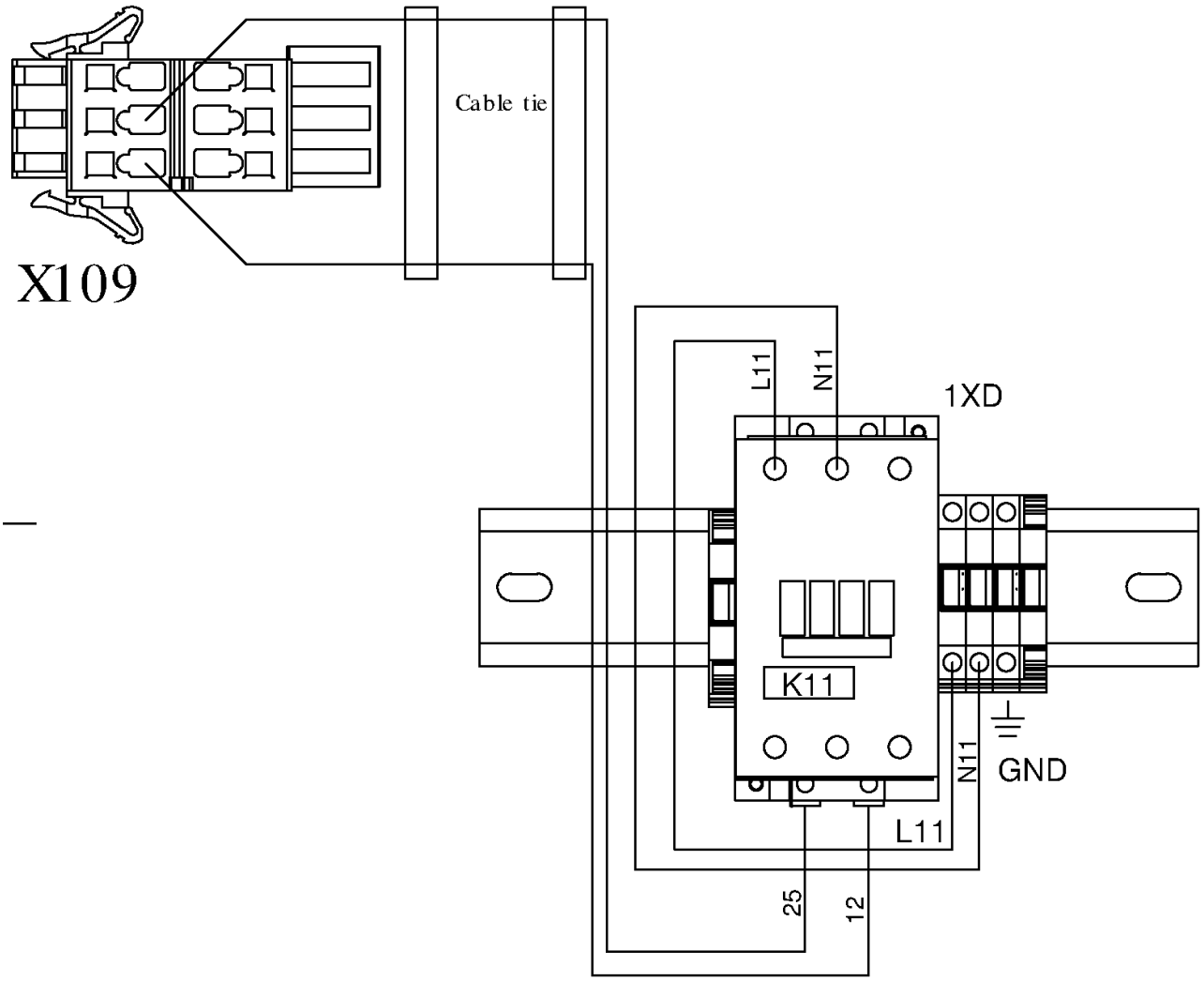
Cable tie
X109
L11
N11
1XD
K11
N11
GND
L11
25
12

Ref	Part Number	Qty	Name	Validity	EL
	2205 0325 41	1	DRYER DIN RAIL	**(22/08/2018 - ...)**	
	1089 9438 67	1	CONTACTOR	**(19/12/2018 - ...)**	K11
	1088 1510 40	2	TERMINAL	**(21/08/2018 - 21/08/2018)** MODEL:CPBG20_18J , MODEL:CPBG25_18J , MODEL:CPBG29_18J , MODEL:CPBG34_18J **(22/08/2018 - ...)**	1XD
	1088 1510 41	2	END SECTION	**(21/08/2018 - 21/08/2018)** MODEL:CPBG20_18J , MODEL:CPBG25_18J , MODEL:CPBG29_18J , MODEL:CPBG34_18J **(22/08/2018 - ...)**	
	1088 1510 42	1	EARTH TERMINAL	**(21/08/2018 - 21/08/2018)** MODEL:CPBG20_18J , MODEL:CPBG25_18J , MODEL:CPBG29_18J , MODEL:CPBG34_18J **(22/08/2018 - ...)**	
	~~1088 0031 81~~	2	END STOP	**(21/08/2018 - 21/08/2018)** MODEL:CPBG20_18J , MODEL:CPBG25_18J , MODEL:CPBG29_18J , MODEL:CPBG34_18J **(22/08/2018 - ...)**	
	Substituted by:	1089 0577 82 - END RETAINER (quantity: 1)			
	1088 0037 63	1	CONNECTOR	**(21/08/2018 - 21/08/2018)** MODEL:CPBG20_18J , MODEL:CPBG25_18J , MODEL:CPBG29_18J , MODEL:CPBG34_18J **(22/08/2018 - ...)**	X109
	2202 2610 01	1	LABEL	**(21/08/2018 - 21/08/2018)** MODEL:CPBG20_18J , MODEL:CPBG25_18J , MODEL:CPBG29_18J , MODEL:CPBG34_18J **(22/08/2018 - ...)**	
	2205 0325 40	1	SERVICE DIAGRAM	**(21/08/2018 - 21/08/2018)** MODEL:CPBG20_18J , MODEL:CPBG25_18J , MODEL:CPBG29_18J , MODEL:CPBG34_18J **(22/08/2018 - ...)**	

Legend:

EAPPR:ULCUL - Electrical approval:UL/cUL
FREQ:60HZ - Frequency:60 Hz
IDRY:Y - Integrated dryer:Yes
MAPPR:ASME - Pressure Vessel Approval:ASME (U Stamp)
MODEL:CPBG20_18J - Model:CPBg 20
MODEL:CPBG25_18J - Model:CPBg 25
MODEL:CPBG29_18J - Model:CPBg 29
MODEL:CPBG34_18J - Model:CPBg 34

32 - Regulation CPBg 20-34 - Gear driven – (AS1210, ASME, CE, MOM, SA – 400V), (CE – 230V), (ASME – 200230460V, 230V, 380V, 440V), (CRNASME – 575V), (CRNASME – 200230460V – With dryer)

(((IDRY:Y + MOVOL:200230460V , MOVOL:575V) + MAPPR:CRNASME , (MOVOL:200230460V , MOVOL:230V , MOVOL:380V , MOVOL:440V) + MAPPR:ASME) + FREQ:60HZ , ((MAPPR:AS1210 , MAPPR:CE , MAPPR:MOM , MAPPR:SA) + MOVOL:400V , MAPPR:CE + MOVOL:230V) + FREQ:50HZ) + (MODEL:CPBG20_18J , MODEL:CPBG25_18J , MODEL:CPBG29_18J , MODEL:CPBG34_18J)

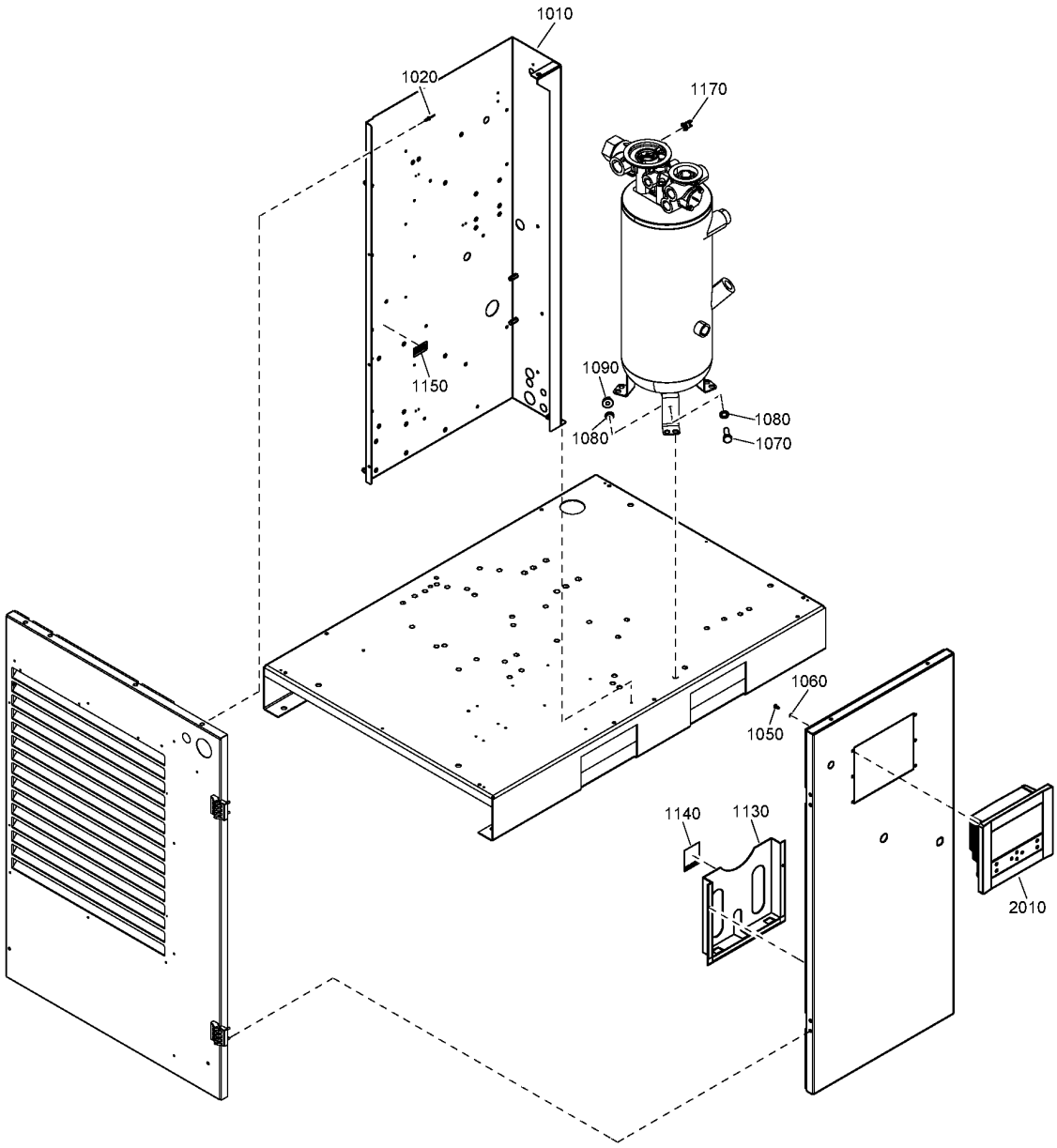

Ref	Part Number	Qty	Name	Validity
1010		1	CUBICLE	
1020	0129 3270 46	3	BLIND RIVET	**(21/08/2018 - 27/02/2019)** (((MAPPR:AS1210 , MAPPR:CE , MAPPR:MOM , MAPPR:SA) + MOVOL:400V , MAPPR:CE + MOVOL:230V) + FREQ:50HZ , ((MOVOL:200230460V , MOVOL:230V , MOVOL:380V , MOVOL:440V) + MAPPR:ASME , (MOVOL:200230460V , MOVOL:575V) + MAPPR:CRNASME) + FREQ:60HZ) **(28/02/2019 - ...)**
1050	0147 1169 03	4	HEXAGON HEAD SCREW	**(21/08/2018 - 27/02/2019)** (((MAPPR:AS1210 , MAPPR:CE , MAPPR:MOM , MAPPR:SA) + MOVOL:400V , MAPPR:CE + MOVOL:230V) + FREQ:50HZ , ((MOVOL:200230460V , MOVOL:230V , MOVOL:380V , MOVOL:440V) + MAPPR:ASME , (MOVOL:200230460V , MOVOL:575V) + MAPPR:CRNASME) + FREQ:60HZ) **(28/02/2019 - ...)**
1060	0333 3100 26	4	LOCK WASHER	**(21/08/2018 - 27/02/2019)** (((MAPPR:AS1210 , MAPPR:CE , MAPPR:MOM , MAPPR:SA) + MOVOL:400V , MAPPR:CE + MOVOL:230V) + FREQ:50HZ , ((MOVOL:200230460V , MOVOL:230V , MOVOL:380V , MOVOL:440V) + MAPPR:ASME , (MOVOL:200230460V , MOVOL:575V) + MAPPR:CRNASME) + FREQ:60HZ) **(28/02/2019 - ...)**
1070	0147 1325 03	1	HEXAGON HEAD SCREW	**(21/08/2018 - 27/02/2019)** (((MAPPR:AS1210 , MAPPR:CE , MAPPR:MOM , MAPPR:SA) + MOVOL:400V , MAPPR:CE + MOVOL:230V) + FREQ:50HZ , ((MOVOL:200230460V , MOVOL:230V , MOVOL:380V , MOVOL:440V) + MAPPR:ASME , (MOVOL:200230460V , MOVOL:575V) + MAPPR:CRNASME) + FREQ:60HZ) **(28/02/2019 - ...)**
1080	0333 3100 17	2	WASHER	**(21/08/2018 - 27/02/2019)** (((MAPPR:AS1210 , MAPPR:CE , MAPPR:MOM , MAPPR:SA) + MOVOL:400V , MAPPR:CE + MOVOL:230V) + FREQ:50HZ , ((MOVOL:200230460V , MOVOL:230V , MOVOL:380V , MOVOL:440V) + MAPPR:ASME , (MOVOL:200230460V , MOVOL:575V) + MAPPR:CRNASME) + FREQ:60HZ) **(28/02/2019 - ...)**
1090	0291 1185 29	1	NUT	**(21/08/2018 - 27/02/2019)** (((MAPPR:AS1210 , MAPPR:CE , MAPPR:MOM , MAPPR:SA) + MOVOL:400V , MAPPR:CE + MOVOL:230V) + FREQ:50HZ , ((MOVOL:200230460V , MOVOL:230V , MOVOL:380V , MOVOL:440V) + MAPPR:ASME , (MOVOL:200230460V , MOVOL:575V) + MAPPR:CRNASME) + FREQ:60HZ) **(28/02/2019 - ...)**
1130	2203 0493 00	1	DOCUMENT HOLDER	**(21/08/2018 - 27/02/2019)** (((MAPPR:AS1210 , MAPPR:CE , MAPPR:MOM , MAPPR:SA) + MOVOL:400V , MAPPR:CE + MOVOL:230V) + FREQ:50HZ , ((MOVOL:200230460V , MOVOL:230V , MOVOL:380V , MOVOL:440V) + MAPPR:ASME , (MOVOL:200230460V , MOVOL:575V) + MAPPR:CRNASME) + FREQ:60HZ) **(28/02/2019 - ...)**
1140	1079 9926 98	1	DECAL	**(21/08/2018 - 27/02/2019)** (((MAPPR:AS1210 , MAPPR:CE , MAPPR:MOM , MAPPR:SA) + MOVOL:400V , MAPPR:CE + MOVOL:230V) + FREQ:50HZ , ((MOVOL:200230460V , MOVOL:230V , MOVOL:380V , MOVOL:440V) + MAPPR:ASME , (MOVOL:200230460V , MOVOL:575V) + MAPPR:CRNASME) + FREQ:60HZ) **(28/02/2019 - ...)**
1150	2202 2610 04	1	LABEL	**(28/02/2019 - ...)** (IDRY:Y + MAPPR:CRNASME , MAPPR:ASME) + FREQ:60HZ + MOVOL:200230460V
1150	2202 2610 03	1	LABEL	**(28/02/2019 - ...)** FREQ:60HZ + MAPPR:ASME + MOVOL:380V
1150	2202 2610 02	1	LABEL	**(28/02/2019 - ...)** FREQ:60HZ + MAPPR:CRNASME + MOVOL:575V
1150	2202 7766 00	1	LABEL	**(28/02/2019 - ...)** FREQ:50HZ + MAPPR:CE + MOVOL:230V
1150	2202 8788 02	1	LABEL	**(28/02/2019 - ...)** FREQ:60HZ + MAPPR:ASME + MOVOL:230V
1150	2202 7767 10	1	LABEL	**(28/02/2019 - ...)** (MODEL:CPBG20_18J , MODEL:CPBG25_18J , MODEL:CPBG29_18J) + FREQ:60HZ + MAPPR:ASME + MOVOL:440V

Legend:

FREQ:50HZ - Frequency:50 Hz
MAPPR:AS1210 - Pressure Vessel Approval:AS1210
MAPPR:CRNASME - Pressure Vessel Approval:CRN (based on ASME)
MODEL:CPBG20_18J - Model:CPBg 20
MODEL:CPBG34_18J - Model:CPBg 34
MOVOL:380V - Supply voltage:380 V
MOVOL:575V - Supply voltage:575 V
FREQ:60HZ - Frequency:60 Hz
MAPPR:ASME - Pressure Vessel Approval:ASME (U Stamp)
MAPPR:MOM - Pressure Vessel Approval:MOM
MODEL:CPBG25_18J - Model:CPBg 25
MOVOL:200230460V - Supply voltage:200-230-460 V
MOVOL:400V - Supply voltage:400 V
IDRY:Y - Integrated dryer:Yes
MAPPR:CE - Pressure Vessel Approval:CE
MAPPR:SA - Pressure Vessel Approval:SA
MODEL:CPBG29_18J - Model:CPBg 29
MOVOL:230V - Supply voltage:230 V
MOVOL:440V - Supply voltage:440 V

32 - Regulation CPBg 20-34 - Gear driven – (AS1210, ASME, CE, MOM, SA – 400V), (CE – 230V), (ASME – 200230460V, 230V, 380V, 440V), (CRNASME – 575V), (CRNASME – 200230460V – With dryer)

(((IDRY:Y + MOVOL:200230460V , MOVOL:575V) + MAPPR:CRNASME , (MOVOL:200230460V , MOVOL:230V , MOVOL:380V , MOVOL:440V) + MAPPR:ASME) + FREQ:60HZ , ((MAPPR:AS1210 , MAPPR:CE , MAPPR:MOM , MAPPR:SA) + MOVOL:400V , MAPPR:CE + MOVOL:230V) + FREQ:50HZ) + (MODEL:CPBG20_18J , MODEL:CPBG25_18J , MODEL:CPBG29_18J , MODEL:CPBG34_18J)

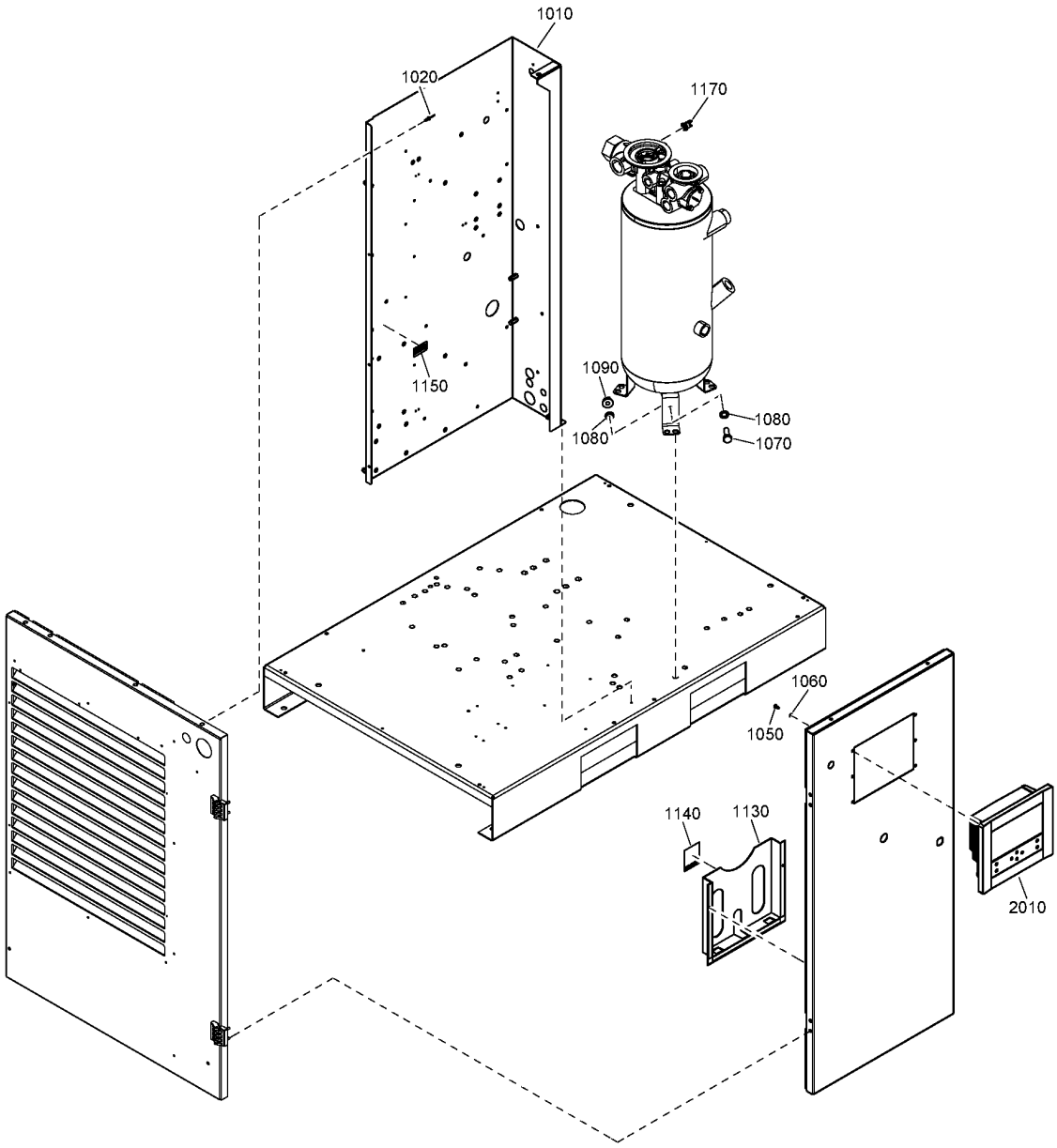

Ref	Part Number	Qty	Name	Validity
1150	2202 7767 00	1	LABEL	**(21/08/2018 - 27/02/2019)** (((MAPPR:AS1210 , MAPPR:CE , MAPPR:MOM , MAPPR:SA) + MOVOL:400V , MAPPR:CE + MOVOL:230V) + FREQ:50HZ , ((MOVOL:200230460V , MOVOL:230V , MOVOL:380V , MOVOL:440V) + MAPPR:ASME , (MOVOL:200230460V , MOVOL:575V) + MAPPR:CRNASME) + FREQ:60HZ) **(28/02/2019 - ...)** (MAPPR:AS1210 , MAPPR:CE , MAPPR:MOM , MAPPR:SA) + (MODEL:CPBG20_18J , MODEL:CPBG25_18J , MODEL:CPBG29_18J , MODEL:CPBG34_18J) + FREQ:50HZ + MOVOL:400V , FREQ:60HZ + MAPPR:ASME + MODEL:CPBG34_18J + MOVOL:440V
1170	2204 1209 01	1	TEMPERATURE SWITCH (TERMIX)	**(21/08/2018 - 27/02/2019)** (((MAPPR:AS1210 , MAPPR:CE , MAPPR:MOM , MAPPR:SA) + MOVOL:400V , MAPPR:CE + MOVOL:230V) + FREQ:50HZ , ((MOVOL:200230460V , MOVOL:230V , MOVOL:380V , MOVOL:440V) + MAPPR:ASME , (MOVOL:200230460V , MOVOL:575V) + MAPPR:CRNASME) + FREQ:60HZ) **(28/02/2019 - ...)**
2010	1900 5200 77	1	CONTROLLER ES4000 STANDARD	**(21/08/2018 - ...)**

Legend:

FREQ:50HZ - Frequency:50 Hz
MAPPR:AS1210 - Pressure Vessel Approval:AS1210
MAPPR:CRNASME - Pressure Vessel Approval:CRN (based on ASME)
MODEL:CPBG20_18J - Model:CPBg 20
MODEL:CPBG34_18J - Model:CPBg 34
MOVOL:380V - Supply voltage:380 V
MOVOL:575V - Supply voltage:575 V
FREQ:60HZ - Frequency:60 Hz
MAPPR:ASME - Pressure Vessel Approval:ASME (U Stamp)
MAPPR:MOM - Pressure Vessel Approval:MOM
MODEL:CPBG25_18J - Model:CPBg 25
MOVOL:200230460V - Supply voltage:200-230-460 V
MOVOL:400V - Supply voltage:400 V
IDRY:Y - Integrated dryer:Yes
MAPPR:CE - Pressure Vessel Approval:CE
MAPPR:SA - Pressure Vessel Approval:SA
MODEL:CPBG29_18J - Model:CPBg 29
MOVOL:230V - Supply voltage:230 V
MOVOL:440V - Supply voltage:440 V

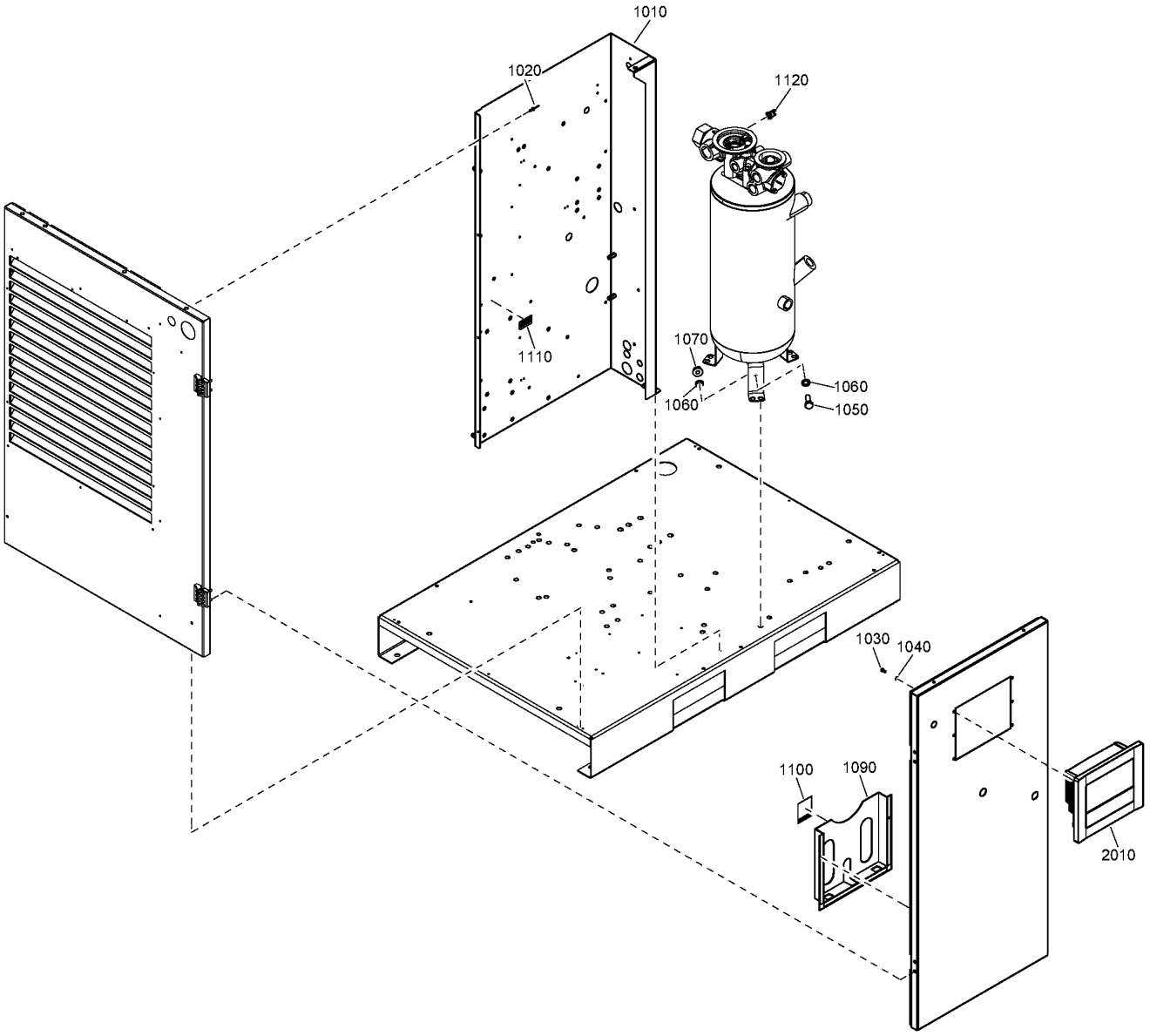
1010
1020
1120
1110
1070
1060
1060
1050
1030
1040
1100
1090
2010

Ref	Part Number	Qty	Name	Validity
1010		1	CUBICLE	
1020	0129 3270 46	3	BLIND RIVET	(28/02/2019 - ...)
1030	0147 1169 03	4	HEXAGON HEAD SCREW	(28/02/2019 - ...)
1040	0333 3100 26	4	LOCK WASHER	(28/02/2019 - ...)
1050	0147 1325 03	1	HEXAGON HEAD SCREW	(28/02/2019 - ...)
1060	0333 3100 17	2	WASHER	(28/02/2019 - ...)
1070	0291 1185 29	1	NUT	(28/02/2019 - ...)
1090	2203 0493 00	1	DOCUMENT HOLDER	(28/02/2019 - ...)
1100	1079 9926 98	1	DECAL	(28/02/2019 - ...)
1110	2202 2610 04	1	LABEL	(28/02/2019 - ...)
1120	2204 1209 01	1	TEMPERATURE SWITCH (TERMIX)	(28/02/2019 - ...)
2010	1900 5200 77	1	CONTROLLER ES4000 STANDARD	(21/08/2018 - ...)

Legend:

FREQ:60HZ - Frequency:60 Hz
MODEL:CPBG20_18J - Model:CPBg 20
MODEL:CPBG34_18J - Model:CPBg 34
IDRY:N - Integrated dryer:No
MODEL:CPBG25_18J - Model:CPBg 25
MOVOL:200230460V - Supply voltage:200-230-460 V
MAPPR:CRNASME - Pressure Vessel Approval:CRN (based on ASME)
MODEL:CPBG29_18J - Model:CPBg 29

34 - Regulation CPVSd 21-34 - Direct driven

(((MOVOL:380V , MOVOL:440V , MOVOL:460V) + MAPPR:ASME , MAPPR:CRNASME + MOVOL:460V) + FREQ:60HZ , (MAPPR:AS1210 , MAPPR:CE , MAPPR:MOM , MAPPR:SA) + FREQ:50HZ + MOVOL:400V) + (MODEL:CPVD21_18J , MODEL:CPVD25_18J , MODEL:CPVD29_18J , MODEL:CPVD34_18J)

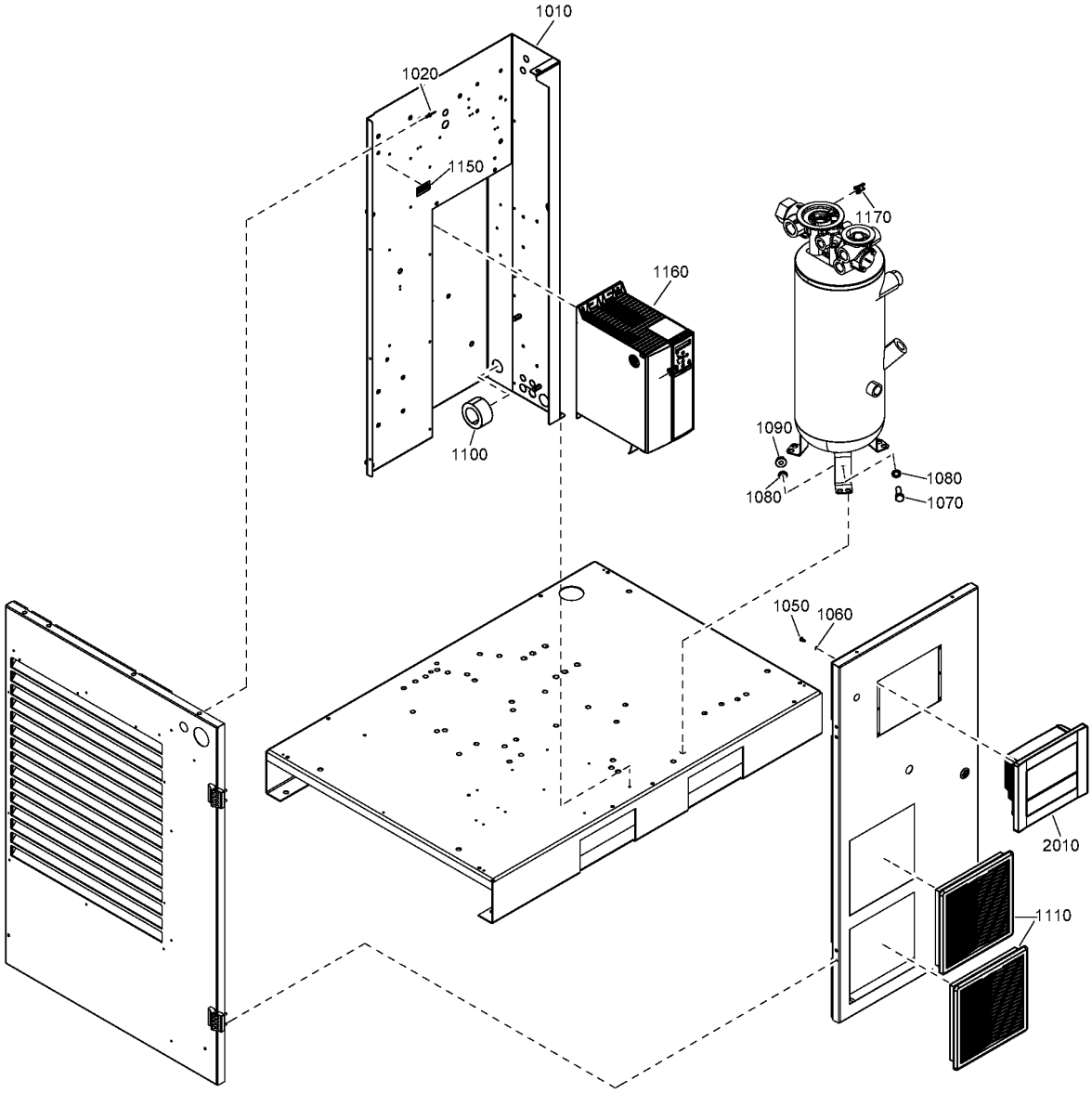

34 - Regulation CPVSd 21-34 - Direct driven

(((MOVOL:380V , MOVOL:440V , MOVOL:460V) + MAPPR:ASME , MAPPR:CRNASME + MOVOL:460V) + FREQ:60HZ , (MAPPR:AS1210 , MAPPR:CE , MAPPR:MOM , MAPPR:SA) + FREQ:50HZ + MOVOL:400V) + (MODEL:CPVD21_18J , MODEL:CPVD25_18J , MODEL:CPVD29_18J , MODEL:CPVD34_18J)

Ref	Part Number	Qty	Name	Validity
1010		1	CUBICLE	
1020	0129 3270 46	6	BLIND RIVET	**(22/08/2018 - ...)**
1050	0147 1169 03	4	HEXAGON HEAD SCREW	**(22/08/2018 - ...)**
1060	0333 3100 26	4	LOCK WASHER	**(22/08/2018 - ...)**
1070	0147 1325 03	1	HEXAGON HEAD SCREW	**(22/08/2018 - ...)**
1080	0333 3100 17	2	WASHER	**(22/08/2018 - ...)**
1090	0291 1185 29	1	NUT	**(22/08/2018 - ...)**
1100	1089 0698 14	2	CHOKE RING	**(05/12/2018 - ...)**
1110	1089 9556 68	2	FILTER	**(22/08/2018 - ...)**
1150	2202 2610 04	1	LABEL	**(28/02/2019 - ...)** (MAPPR:ASME , MAPPR:CRNASME) + FREQ:60HZ + MOVOL:460V
1150	2202 7767 10	1	LABEL	**(28/02/2019 - ...)** FREQ:60HZ + MAPPR:ASME + MOVOL:440V
1150	2202 7767 00	1	LABEL	**(22/08/2018 - 27/02/2019)** **(28/02/2019 - ...)** (MAPPR:AS1210 , MAPPR:CE , MAPPR:MOM , MAPPR:SA) + FREQ:50HZ + MOVOL:400V
1150	2202 2610 03	1	LABEL	**(28/02/2019 - ...)** FREQ:60HZ + MAPPR:ASME + MOVOL:380V
1160		1	CONVERTER SOFTWARE	**(22/08/2018 - ...)** (MAPPR:AS1210 , MAPPR:CE , MAPPR:MOM , MAPPR:SA) + FREQ:50HZ + MODEL:CPVD29_18J + MOVOL:400V
1160		1	CONVERTER SOFTWARE	**(22/08/2018 - ...)** (MAPPR:AS1210 , MAPPR:CE , MAPPR:MOM , MAPPR:SA) + FREQ:50HZ + MODEL:CPVD34_18J + MOVOL:400V
1160		1	CONVERTER SOFTWARE	**(22/08/2018 - ...)** (MOVOL:380V , MOVOL:440V) + FREQ:60HZ + MAPPR:ASME + MODEL:CPVD21_18J
1160		1	CONVERTER SOFTWARE	**(22/08/2018 - ...)** (MOVOL:380V , MOVOL:440V) + FREQ:60HZ + MAPPR:ASME + MODEL:CPVD29_18J
1160		1	CONVERTER SOFTWARE	**(22/08/2018 - ...)** (MAPPR:ASME , MAPPR:CRNASME) + FREQ:60HZ + MODEL:CPVD21_18J + MOVOL:460V
1160		1	CONVERTER SOFTWARE	**(22/08/2018 - ...)** (MAPPR:ASME , MAPPR:CRNASME) + FREQ:60HZ + MODEL:CPVD29_18J + MOVOL:460V
1160		1	CONVERTER SOFTWARE	**(22/08/2018 - ...)** (MOVOL:380V , MOVOL:440V) + FREQ:60HZ + MAPPR:ASME + MODEL:CPVD34_18J
1160		1	CONVERTER SOFTWARE	**(22/08/2018 - ...)** (MAPPR:AS1210 , MAPPR:CE , MAPPR:MOM , MAPPR:SA) + FREQ:50HZ + MODEL:CPVD25_18J + MOVOL:400V
1160		1	CONVERTER SOFTWARE	**(22/08/2018 - ...)** (MOVOL:380V , MOVOL:440V) + FREQ:60HZ + MAPPR:ASME + MODEL:CPVD25_18J
1160		1	CONVERTER SOFTWARE	**(22/08/2018 - ...)** (MAPPR:ASME , MAPPR:CRNASME) + FREQ:60HZ + MODEL:CPVD34_18J + MOVOL:460V
1160		1	CONVERTER SOFTWARE	**(22/08/2018 - ...)** (MAPPR:ASME , MAPPR:CRNASME) + FREQ:60HZ + MODEL:CPVD25_18J + MOVOL:460V
1160		1	CONVERTER SOFTWARE	**(22/08/2018 - ...)** (MAPPR:AS1210 , MAPPR:CE , MAPPR:MOM , MAPPR:SA) + FREQ:50HZ + MODEL:CPVD21_18J + MOVOL:400V
1170	2204 1209 01	1	TEMPERATURE SWITCH (TERMIX)	**(22/08/2018 - ...)**
2010	1900 5200 78	1	CONTROLLER ES4000 STANDARD PLUS	**(22/08/2018 - ...)**

Legend:

FREQ:50HZ - Frequency:50 Hz
FREQ:60HZ - Frequency:60 Hz
MAPPR:AS1210 - Pressure Vessel Approval:AS1210
MAPPR:ASME - Pressure Vessel Approval:ASME (U Stamp)
MAPPR:CE - Pressure Vessel Approval:CE
MAPPR:CRNASME - Pressure Vessel Approval:CRN (based on ASME)
MAPPR:MOM - Pressure Vessel Approval:MOM
MAPPR:SA - Pressure Vessel Approval:SA
MODEL:CPVD21_18J - Model:CPVSd 21
MODEL:CPVD25_18J - Model:CPVSd 25
MODEL:CPVD29_18J - Model:CPVSd 29
MODEL:CPVD34_18J - Model:CPVSd 34
MOVOL:380V - Supply voltage:380 V
MOVOL:400V - Supply voltage:400 V
MOVOL:440V - Supply voltage:440 V
MOVOL:460V - Supply voltage:460 V

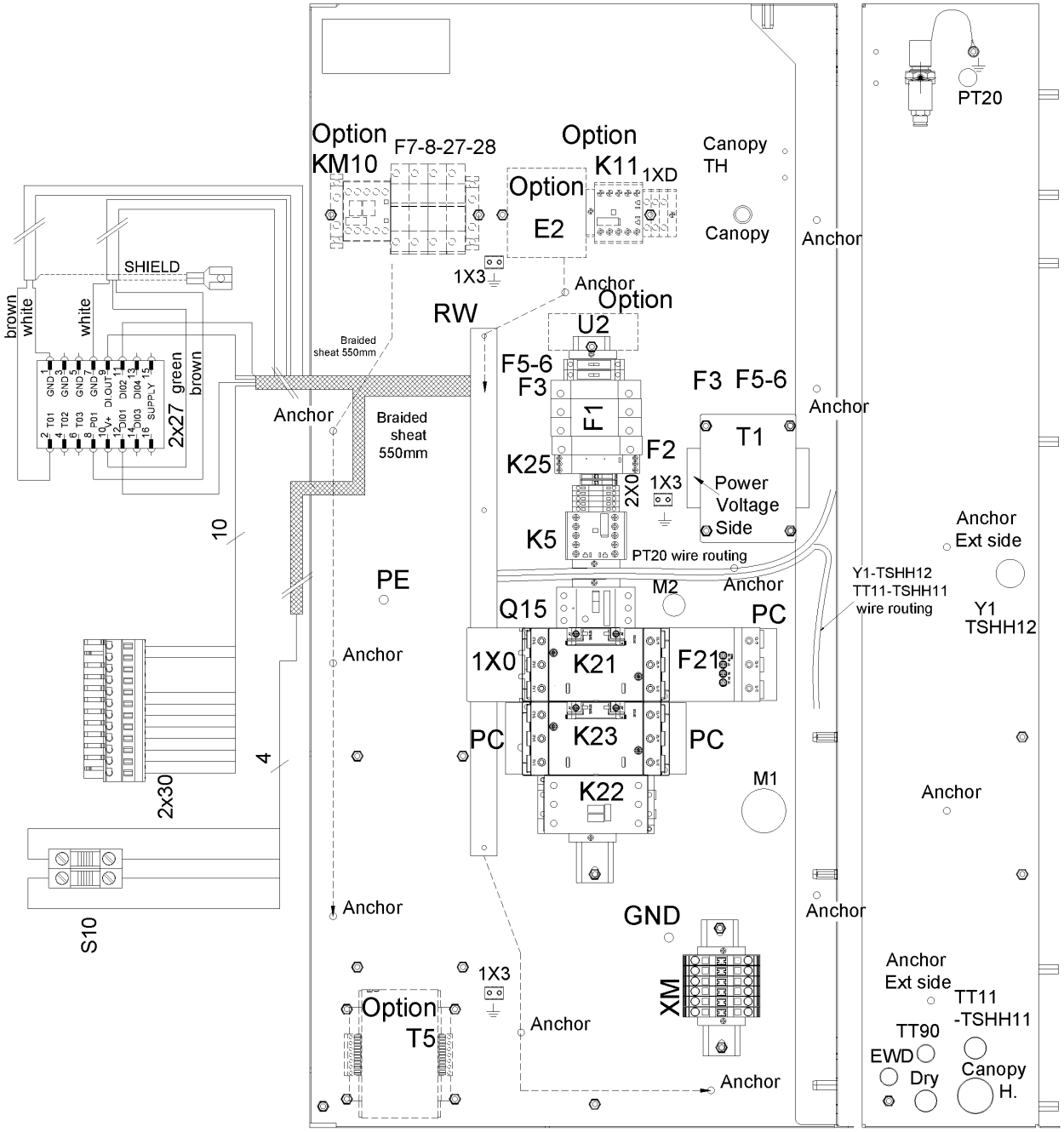
PT20
Option
KM10
F7-8-27-28
Option
K11
1XD
Canopy
TH
Option
E2
Canopy
Anchor
SHIELD
1X3
Anchor
Option
U2
RW
brown
white
white
Braided
sheat 550mm
F5-6
F3
F3 F5-6
Anchor
GND 1
GND 3
GND 5
GND 7
DI OUT 11
DI02 13
DI04 15
T01 2
T02 4
T03 6
P01 8
10 V+
DI01 14
DI03 16
SUPPLY
2x27
green
brown
Anchor
Braided
sheat
550mm
F1
T1
K25
F2
2X0
1X3
Power
Voltage
Side
Anchor
Ext side
10
K5
PT20 wire routing
PE
M2
Anchor
Y1-TSHH12
TT11-TSHH11
wire routing
Y1
TSHH12
Q15
PC
Anchor
1X0
K21
F21
PC
K23
PC
4
M1
Anchor
2x30
K22
Anchor
GND
Anchor
S10
1X3
Anchor
Ext side
Option
T5
Anchor
XM
TT11
-TSHH11
TT90
EWD
Dry
Canopy
H.
Anchor

Ref	Part Number	Qty	Name	Validity	EL
	2205 0137 51	1	CUBICLE	(21/11/2018 - ...) MODEL:CPBG20_18J	
	2205 0137 52	1	CUBICLE	(21/11/2018 - ...) MODEL:CPBG25_18J	
	2205 0137 53	1	CUBICLE	(21/11/2018 - ...) MODEL:CPBG29_18J	
	2205 0138 54	1	CUBICLE	(21/11/2018 - ...) MODEL:CPBG34_18J	
	1089 9267 96	1	SUPPLY BLOCK	(21/11/2018 - ...) MODEL:CPBG20_18J , MODEL:CPBG25_18J , MODEL:CPBG29_18J	1X0
	1089 9362 04	1	COVER FOR TERMINAL	(21/11/2018 - ...) MODEL:CPBG34_18J	1X0
	2202 9049 00	3	INSULATION FOR TERMINAL	(21/11/2018 - ...) MODEL:CPBG34_18J	1X0
	1622 1692 00	3	CONNECTION ELEMENT S3	(21/11/2018 - ...) MODEL:CPBG34_18J	1X0
	1089 9496 93	1	CONTACTOR	(21/11/2018 - ...) MODEL:CPBG25_18J	K21
	1089 9496 92	1	CONTACTOR	(21/11/2018 - ...) MODEL:CPBG20_18J	K21
	1089 9496 96	1	CONTACTOR	(21/11/2018 - ...) MODEL:CPBG34_18J	K21
	1089 9496 94	1	CONTACTOR	(21/11/2018 - ...) MODEL:CPBG29_18J	K21
	1089 9496 93	1	CONTACTOR	(21/11/2018 - ...) MODEL:CPBG25_18J	K23
	1089 9496 92	1	CONTACTOR	(21/11/2018 - ...) MODEL:CPBG20_18J	K23
	1089 9496 96	1	CONTACTOR	(21/11/2018 - ...) MODEL:CPBG34_18J	K23
	1089 9496 94	1	CONTACTOR	(21/11/2018 - ...) MODEL:CPBG29_18J	K23
	1089 9216 15	3	COVER	(21/11/2018 - ...) MODEL:CPBG20_18J , MODEL:CPBG25_18J , MODEL:CPBG29_18J	PC
	1089 9216 16	3	COVER	(21/11/2018 - ...) MODEL:CPBG34_18J	PC
	1089 9438 75	1	CONTACTOR	(21/11/2018 - ...) MODEL:CPBG29_18J , MODEL:CPBG34_18J	K22
	1089 9438 73	1	CONTACTOR	(21/11/2018 - ...) MODEL:CPBG20_18J , MODEL:CPBG25_18J	K22
	1089 9205 18	1	OVERLOAD RELAY	(21/11/2018 - ...) MODEL:CPBG34_18J	F21
	1089 9205 87	1	OVERLOAD RELAY	(21/11/2018 - ...) MODEL:CPBG29_18J	F21
	1089 9205 82	1	OVERLOAD RELAY	(21/11/2018 - ...) MODEL:CPBG20_18J	F21
	1089 9205 84	1	OVERLOAD RELAY	(21/11/2018 - ...) MODEL:CPBG25_18J	F21
	1089 9267 29	1	CIRCUIT BREAKER	(21/11/2018 - ...) MODEL:CPBG29_18J , MODEL:CPBG34_18J	Q15
	1089 9267 23	1	CIRCUIT BREAKER	(21/11/2018 - ...) MODEL:CPBG20_18J	Q15
	1089 9267 25	1	CIRCUIT BREAKER	(21/11/2018 - ...) MODEL:CPBG25_18J	Q15
	1089 9267 56	1	AUX CONTACT	(21/11/2018 - ...)	Q15
	1089 9421 85	1	AUX RELAY	(21/11/2018 - ...)	K5
	0698 5140 76	1	CABLE GLAND	(21/11/2018 - ...)	
	0697 9809 25	1	LOCK NUT	(21/11/2018 - ...)	
	0698 5141 17	1	CABLE GLAND	(21/11/2018 - ...)	Y1-TSHH12
	0698 5148 72	1	SEAL	(21/11/2018 - ...)	Y1-TSHH12
	0697 9809 54	1	LOCK NUT	(21/11/2018 - ...)	Y1-TSHH12
	0698 5141 07	1	CABLE GLAND	(21/11/2018 - ...)	PT20
	0697 9809 59	1	LOCK NUT	(21/11/2018 - ...)	PT20
	0698 5141 21	1	CABLE GLAND	(21/11/2018 - ...)	TT11-TSHH11
	~~0698 5148 14~~	1	SEAL	(21/11/2018 - ...)	TT11-TSHH11
	Substituted by:	0698 5140 72 - CABLE GLAND M20 (quantity: 1)			
	0697 9809 53	1	LOCK NUT	(21/11/2018 - ...)	TT11-TSHH11
	0698 5141 21	1	CABLE GLAND	(21/11/2018 - ...)	CG M2
	0697 9809 53	1	LOCK NUT	(21/11/2018 - ...)	CG M2
	1089 9575 16	1	PHASE SEQUENCE RELAY	(21/11/2018 - ...)	K25
	2202 9691 01	1	TRANSFORMER	(21/11/2018 - ...)	T1
	1089 0612 22	1	FUSE	(21/11/2018 - ...)	F2
	1089 9594 01	1	FUSE HOLDER	(21/11/2018 - ...)	F2
	1089 0612 25	2	FUSE	(21/11/2018 - ...)	F1
	1089 9594 02	1	FUSE HOLDER	(21/11/2018 - ...)	F1

Legend:

FREQ:50HZ - Frequency:50 Hz
MAPPR:CE - Pressure Vessel Approval:CE
MODEL:CPBG20_18J - Model:CPBg 20
MODEL:CPBG25_18J - Model:CPBg 25
MODEL:CPBG29_18J - Model:CPBg 29
MODEL:CPBG34_18J - Model:CPBg 34
MOVOL:230V - Supply voltage:230 V

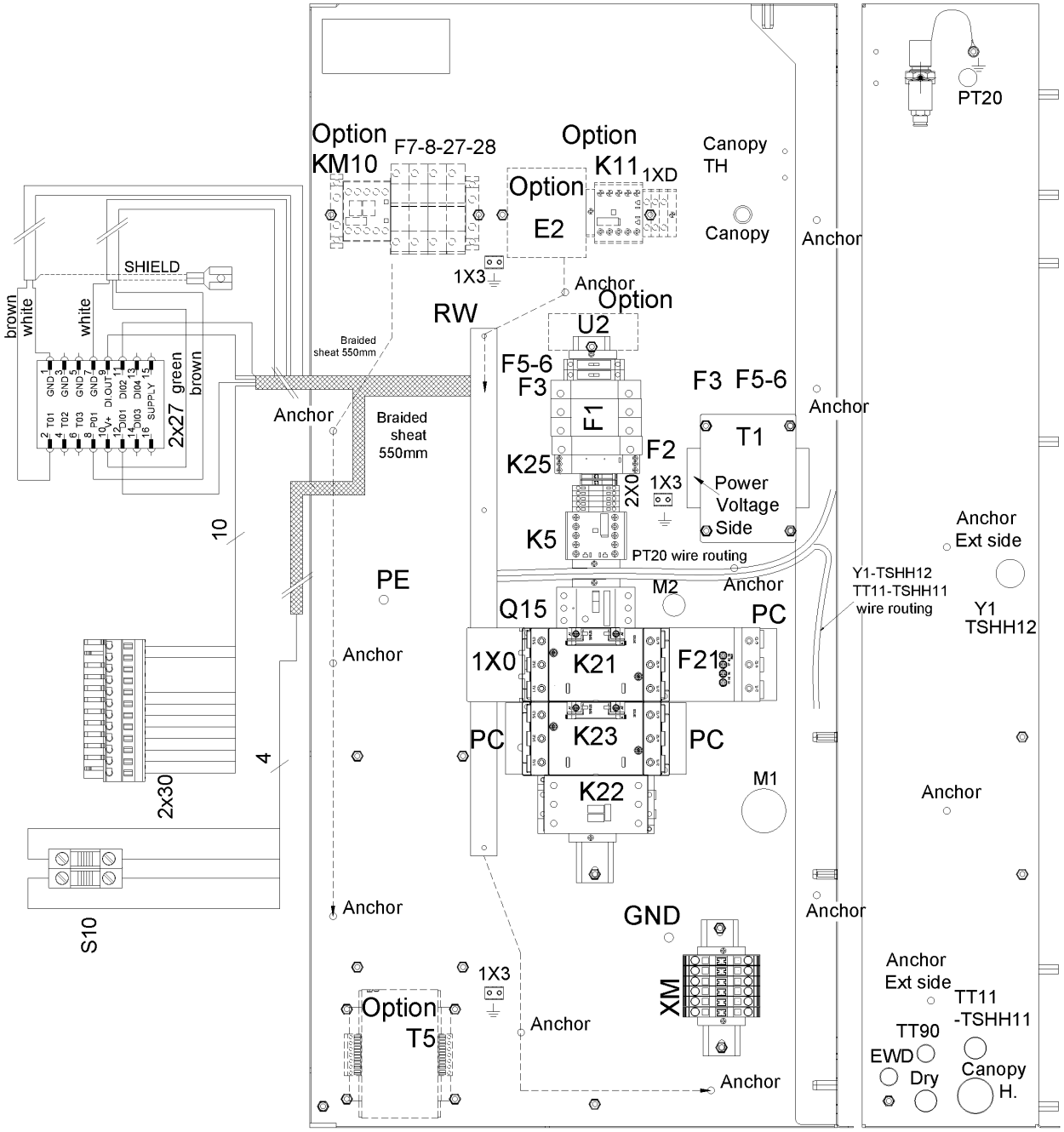
PT20
Option
KM10
F7-8-27-28
Option
K11
1XD
Canopy
TH
Option
E2
Canopy
Anchor
SHIELD
1X3
Anchor
Option
U2
RW
brown
white
white
Braided
sheat 550mm
F5-6
F3
F3 F5-6
Anchor
GND 1
GND 3
GND 5
GND 7
DI_OUT 11
DI02 13
DI04 15
SUPPLY
T01 2
T02 4
T03 6
P01 8
10 V+ 12
DI01 14
DI03 16
2x27
green
brown
Anchor
Braided
sheat
550mm
F1
T1
F2
K25
2X0
1X3
Power
Voltage
Side
Anchor
Ext side
10
K5
PT20 wire routing
PE
M2
Anchor
Y1-TSHH12
TT11-TSHH11
wire routing
Y1
TSHH12
Q15
PC
Anchor
1X0
K21
F21
PC
K23
PC
4
M1
Anchor
2x30
K22
Anchor
GND
Anchor
S10
1X3
Anchor
Ext side
Option
T5
Anchor
XM
TT11
-TSHH11
TT90
EWD
Dry
Canopy
H.
Anchor

Ref	Part Number	Qty	Name	Validity	EL
	1089 0612 27	1	FUSE	(21/11/2018 - ...)	F3
	1089 9594 01	1	FUSE HOLDER	(21/11/2018 - ...)	F3
	1089 9037 42	1	FUSE	(21/11/2018 - ...)	F5-6
	1088 1510 38	2	FUSE HOLDER	(21/11/2018 - ...)	F5-6
	1088 1510 39	2	END SECTION	(21/11/2018 - ...)	F5-6
	1088 1510 13	5	TERMINAL	(21/11/2018 - ...)	2X0
	1088 1515 16	1	END PLATE	(21/11/2018 - ...)	2X0
	1089 0506 09	2	EARTH-TERMINAL	(21/11/2018 - ...)	2X0
	~~1088 0031 81~~	4	END STOP	(21/11/2018 - ...)	2X0
	Substituted by:	1089 0577 82 - END RETAINER (quantity: 1)			
	0694 5900 05	3	TAB	(21/11/2018 - ...)	1X3
	1088 0037 81	1	CONNECTOR	(21/11/2018 - ...)	2X27
	1088 0031 32	1	CONNECTOR	(21/11/2018 - ...)	2X30
	1088 0037 31	1	CONNECTOR 3-POLE	(21/11/2018 - ...)	X109
	1089 9513 89	1	EMERGENCY STOP PUSH BUTTON	(21/11/2018 - ...)	S10
	1089 9482 98	2	NC CONTACT	(21/11/2018 - ...)	S10
	1089 9482 95	1	MODULE HOLDER	(21/11/2018 - ...)	S10
	1089 9125 13	1	DECAL	(21/11/2018 - ...)	S10
	1088 0153 03	1	CONNECTION HEAD	(21/11/2018 - ...)	XY1
	1088 0021 92	1	CONNECTOR	(21/11/2018 - ...)	XTT11-TSHH1
	1088 0021 93	4	TERMINAL PIN	(21/11/2018 - ...)	XTT11-TSHH1
	2204 1039 00	1	PRESSURE SENSOR	(21/11/2018 - ...)	PT20
	1088 0021 59	1	CONNECTOR FEMALE	(21/11/2018 - ...)	PT20
	1088 0021 60	3	WIRE SEAL	(21/11/2018 - ...)	PT20
	1088 0021 61	3	TERMINAL PIN	(21/11/2018 - ...)	PT20
	2204 1407 00	1	STRAIGHT FITTING	(21/11/2018 - ...)	PT20
	0348 0110 03	1	ANCHOR PLATE	(21/11/2018 - ...)	PT20
	0348 0101 13	1	CABLE TIE	(21/11/2018 - ...)	PT20
	6236 3126 00	9	ANCHOR	(21/11/2018 - ...)	
	2204 1487 00	1	CUBICLE BOX	(21/11/2018 - ...)	
	2205 0137 00	2	SERVICE DIAGRAM	(21/11/2018 - ...)	
	2205 0137 60	2	ELECTRICAL LIST	(21/11/2018 - ...)	
	2200 7723 35	1	GLOSSARY ELECTRICAL PARTS	(21/11/2018 - ...)	
	2204 1227 51	1	SINGLE LINE LABEL	(21/11/2018 - ...)	

Legend:

FREQ:50HZ - Frequency:50 Hz
MAPPR:CE - Pressure Vessel Approval:CE
MODEL:CPBG20_18J - Model:CPBg 20
MODEL:CPBG25_18J - Model:CPBg 25
MODEL:CPBG29_18J - Model:CPBg 29
MODEL:CPBG34_18J - Model:CPBg 34
MOVOL:230V - Supply voltage:230 V

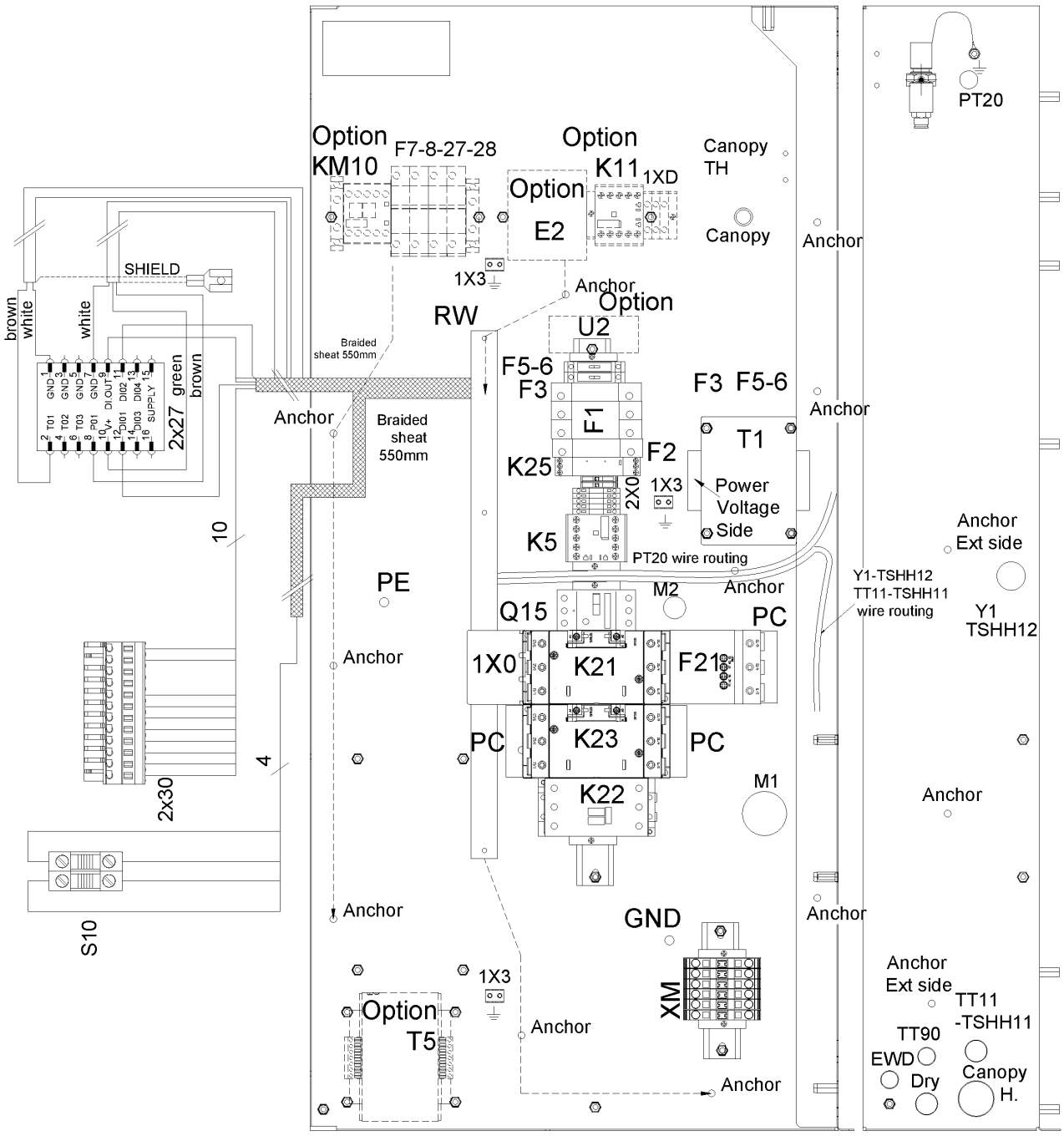
PT20
Option
KM10
F7-8-27-28
Option
K11
1XD
Canopy
TH
Option
E2
Canopy
Anchor
SHIELD
1X3
Anchor
Option
U2
RW
brown
white
white
Braided
sheat 550mm
F5-6
F3
F3 F5-6
Anchor
GND 1
GND 3
GND 5
GND 7
DI OUT 9
DI02 11
DI04 13
SUPPLY 15
green
brown
T01 2
T02 4
T03 6
P01 8
10 V+
DI01 12
DI03 14
16
2x27
Anchor
Braided
sheat
550mm
F1
F2
T1
K25
2X0
1X3
Power
Voltage
Side
Anchor
Ext side
10
K5
PT20 wire routing
PE
M2
Anchor
Y1-TSHH12
TT11-TSHH11
wire routing
Y1
TSHH12
Q15
PC
Anchor
1X0
K21
F21
PC
K23
PC
4
M1
Anchor
2x30
K22
Anchor
GND
Anchor
S10
1X3
Anchor
Ext side
TT11
-TSHH11
Option
T5
Anchor
XM
TT90
EWD
Dry
Canopy
H.
Anchor

Ref	Part Number	Qty	Name	Validity	EL
	2205 0137 55	1	CUBICLE	(21/11/2018 - ...) MODEL:CPBG20_18J	
	2205 0137 56	1	CUBICLE	(21/11/2018 - ...) MODEL:CPBG25_18J	
	2205 0137 57	1	CUBICLE	(21/11/2018 - ...) MODEL:CPBG29_18J	
	2205 0137 58	1	CUBICLE	(21/11/2018 - ...) MODEL:CPBG34_18J	
	1089 9267 96	1	SUPPLY BLOCK	(21/11/2018 - ...) MODEL:CPBG20_18J , MODEL:CPBG25_18J , MODEL:CPBG29_18J	1X0
	1089 9362 04	1	COVER FOR TERMINAL	(21/11/2018 - ...) MODEL:CPBG34_18J	1X0
	2202 9049 00	3	INSULATION FOR TERMINAL	(21/11/2018 - ...) MODEL:CPBG34_18J	1X0
	1622 1692 00	3	CONNECTION ELEMENT	(21/11/2018 - ...) MODEL:CPBG34_18J	1X0
	1089 9496 94	1	CONTACTOR	(21/11/2018 - ...) MODEL:CPBG29_18J	K21
	1089 9496 92	1	CONTACTOR	(21/11/2018 - ...) MODEL:CPBG20_18J	K21
	1089 9496 96	1	CONTACTOR	(21/11/2018 - ...) MODEL:CPBG34_18J	K21
	1089 9496 93	1	CONTACTOR	(21/11/2018 - ...) MODEL:CPBG25_18J	K21
	1089 9496 96	1	CONTACTOR	(21/11/2018 - ...) MODEL:CPBG34_18J	K23
	1089 9496 93	1	CONTACTOR	(21/11/2018 - ...) MODEL:CPBG25_18J	K23
	1089 9496 94	1	CONTACTOR	(21/11/2018 - ...) MODEL:CPBG29_18J	K23
	1089 9496 92	1	CONTACTOR	(21/11/2018 - ...) MODEL:CPBG20_18J	K23
	1089 9216 15	3	COVER	(21/11/2018 - ...) MODEL:CPBG20_18J , MODEL:CPBG25_18J , MODEL:CPBG29_18J	PC
	1089 9216 16	3	COVER	(21/11/2018 - ...) MODEL:CPBG34_18J	PC
	1089 9438 75	1	CONTACTOR	(21/11/2018 - ...) MODEL:CPBG29_18J , MODEL:CPBG34_18J	K22
	1089 9438 73	1	CONTACTOR	(21/11/2018 - ...) MODEL:CPBG20_18J , MODEL:CPBG25_18J	K22
	1089 9205 82	1	OVERLOAD RELAY	(21/11/2018 - ...) MODEL:CPBG20_18J	F21
	1089 9205 87	1	OVERLOAD RELAY	(21/11/2018 - ...) MODEL:CPBG29_18J	F21
	1089 9205 84	1	OVERLOAD RELAY	(21/11/2018 - ...) MODEL:CPBG25_18J	F21
	1089 9205 18	1	OVERLOAD RELAY	(21/11/2018 - ...) MODEL:CPBG34_18J	F21
	1089 9267 26	1	CIRCUIT BREAKER	(21/11/2018 - ...) MODEL:CPBG25_18J , MODEL:CPBG29_18J	Q15
	1089 9267 30	1	CIRCUIT BREAKER	(21/11/2018 - ...) MODEL:CPBG34_18J	Q15
	1089 9267 23	1	CIRCUIT BREAKER	(21/11/2018 - ...) MODEL:CPBG20_18J	Q15
	1089 9267 56	1	AUX CONTACT	(21/11/2018 - ...)	Q15
	1088 0031 74	6	TERMINAL	(19/12/2018 - ...)	XM
	1088 0031 99	1	END PLATE	(19/12/2018 - ...)	XM
	~~1088 0031 81~~	2	END STOP	(21/11/2018 - ...)	XM
	Substituted by:	1089 0577 82 - END RETAINER (quantity: 1)			
	1089 9421 85	1	AUX RELAY	(21/11/2018 - ...)	K5
	0698 5140 76	1	CABLE GLAND	(21/11/2018 - ...)	
	0697 9809 25	1	LOCK NUT	(21/11/2018 - ...)	
	0698 5141 17	1	CABLE GLAND	(21/11/2018 - ...)	Y1-TSHH12
	0698 5148 72	1	SEAL	(21/11/2018 - ...)	Y1-TSHH12
	0697 9809 54	1	LOCK NUT	(21/11/2018 - ...)	Y1-TSHH12
	0698 5141 07	1	CABLE GLAND	(21/11/2018 - ...)	PT20
	0697 9809 59	1	LOCK NUT	(21/11/2018 - ...)	PT20
	0698 5141 21	1	CABLE GLAND	(21/11/2018 - ...)	TT11-TSHH11
	~~0698 5148 14~~	1	SEAL	(21/11/2018 - ...)	TT11-TSHH11
	Substituted by:	0698 5140 72 - CABLE GLAND M20 (quantity: 1)			
	0697 9809 53	1	LOCK NUT	(21/11/2018 - ...)	TT11-TSHH11
	0698 5141 21	1	CABLE GLAND	(21/11/2018 - ...)	M2
	0697 9809 53	1	LOCK NUT	(21/11/2018 - ...)	M2
	1089 9575 16	1	PHASE SEQUENCE RELAY	(21/11/2018 - ...)	K25
	2202 9691 01	1	TRANSFORMER	(21/11/2018 - ...)	T1

Legend:

FREQ:60HZ - Frequency:60 Hz
MODEL:CPBG25_18J - Model:CPBg 25
MOVOL:230V - Supply voltage:230 V
MAPPR:ASME - Pressure Vessel Approval:ASME (U Stamp)
MODEL:CPBG29_18J - Model:CPBg 29
MODEL:CPBG20_18J - Model:CPBg 20
MODEL:CPBG34_18J - Model:CPBg 34

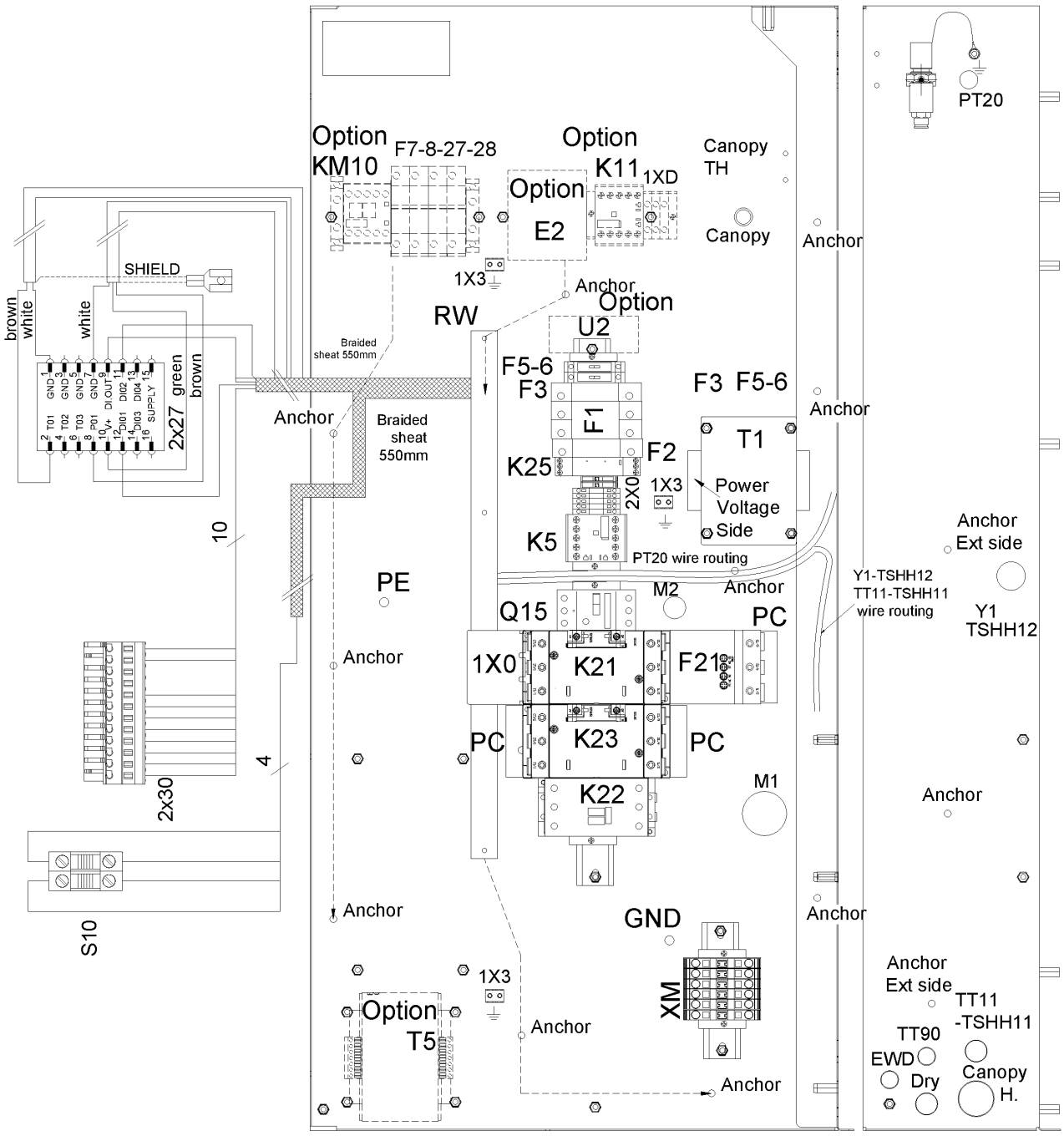
Option
KM10
F7-8-27-28
Option
K11
1XD
Option
E2
Canopy
TH
Canopy
Anchor
PT20
SHIELD
1X3
Anchor
Option
U2
RW
Braided
sheat 550mm
F5-6
F3
F3 F5-6
F1
F2
T1
K25
2X0
1X3
Power
Voltage
Side
K5
PT20 wire routing
Anchor
Braided
sheat
550mm
brown
white
white
green
brown
2x27
10
PE
M2
Anchor
Y1-TSHH12
TT11-TSHH11
wire routing
Anchor
Ext side
Y1
TSHH12
Q15
PC
1X0
K21
F21
Anchor
PC
K23
PC
K22
M1
4
2x30
S10
Anchor
GND
Anchor
1X3
Option
T5
Anchor
XM
Anchor
Anchor
Ext side
TT11
-TSHH11
TT90
EWD
Dry
Canopy
H.

Ref	Part Number	Qty	Name	Validity	EL
	1089 0612 22	1	FUSE	(21/11/2018 - ...)	F2
	1089 9594 01	1	FUSE HOLDER	(21/11/2018 - ...)	F2
	1089 0612 25	2	FUSE	(21/11/2018 - ...)	F1
	1089 9594 02	1	FUSE HOLDER	(21/11/2018 - ...)	F1
	1089 0612 27	1	FUSE	(21/11/2018 - ...)	F3
	1089 9594 01	1	FUSE HOLDER	(21/11/2018 - ...)	F3
	1089 9037 42	1	FUSE	(21/11/2018 - ...)	F5-6
	1088 1510 38	2	FUSE HOLDER	(21/11/2018 - ...)	F5-6
	1088 1510 39	2	END SECTION	(21/11/2018 - ...)	F5-6
	1088 1510 13	5	TERMINAL	(21/11/2018 - ...)	2X0
	1088 1515 16	1	END PLATE	(21/11/2018 - ...)	2X0
	1089 0506 09	2	EARTH-TERMINAL	(21/11/2018 - ...)	2X0
	~~1088 0031 81~~	4	END STOP	(21/11/2018 - ...)	2X0
	Substituted by:	1089 0577 82 - END RETAINER (quantity: 1)			
	0694 5900 05	3	TAB	(21/11/2018 - ...)	1X3
	1088 0037 81	1	CONNECTOR	(21/11/2018 - ...)	2X27
	1088 0031 32	1	CONNECTOR	(21/11/2018 - ...)	2X30
	1088 0037 31	1	CONNECTOR 3-POLE	(21/11/2018 - ...)	X109
	1089 9513 89	1	EMERGENCY STOP PUSH BUTTON	(21/11/2018 - ...)	S10
	1089 9482 98	2	NC CONTACT	(21/11/2018 - ...)	S10
	1089 9482 95	1	MODULE HOLDER	(21/11/2018 - ...)	S10
	1089 9125 13	1	DECAL	(21/11/2018 - ...)	S10
	1088 0153 03	1	CONNECTION HEAD	(21/11/2018 - ...)	XY1
	1088 0021 92	1	CONNECTOR	(21/11/2018 - ...)	XTT11-TSHH1
	1088 0021 93	4	TERMINAL PIN	(21/11/2018 - ...)	XTT11-TSHH1
	2204 1039 00	1	PRESSURE SENSOR	(21/11/2018 - ...)	PT20
	1088 0021 59	1	CONNECTOR FEMALE	(21/11/2018 - ...)	PT20
	1088 0021 60	3	WIRE SEAL	(21/11/2018 - ...)	PT20
	1088 0021 61	3	TERMINAL PIN	(21/11/2018 - ...)	PT20
	2204 1407 00	1	STRAIGHT FITTING	(21/11/2018 - ...)	PT20
	0348 0110 03	1	ANCHOR PLATE	(21/11/2018 - ...)	PT20
	0348 0101 13	1	CABLE TIE	(21/11/2018 - ...)	PT20
	6236 3126 00	9	ANCHOR	(21/11/2018 - ...)	
	2204 1487 00	1	CUBICLE BOX	(21/11/2018 - ...)	
	2205 0137 00	2	SERVICE DIAGRAM	(21/11/2018 - ...)	
	2205 0137 60	2	ELECTRICAL LIST	(21/11/2018 - ...)	
	2200 7723 35	1	GLOSSARY ELECTRICAL PARTS	(21/11/2018 - ...)	
	2204 1227 51	1	SINGLE LINE LABEL	(21/11/2018 - ...)	

Legend:

FREQ:60HZ - Frequency:60 Hz
MAPPR:ASME - Pressure Vessel Approval:ASME (U Stamp)
MODEL:CPBG20_18J - Model:CPBg 20
MODEL:CPBG25_18J - Model:CPBg 25
MODEL:CPBG29_18J - Model:CPBg 29
MODEL:CPBG34_18J - Model:CPBg 34
MOVOL:230V - Supply voltage:230 V

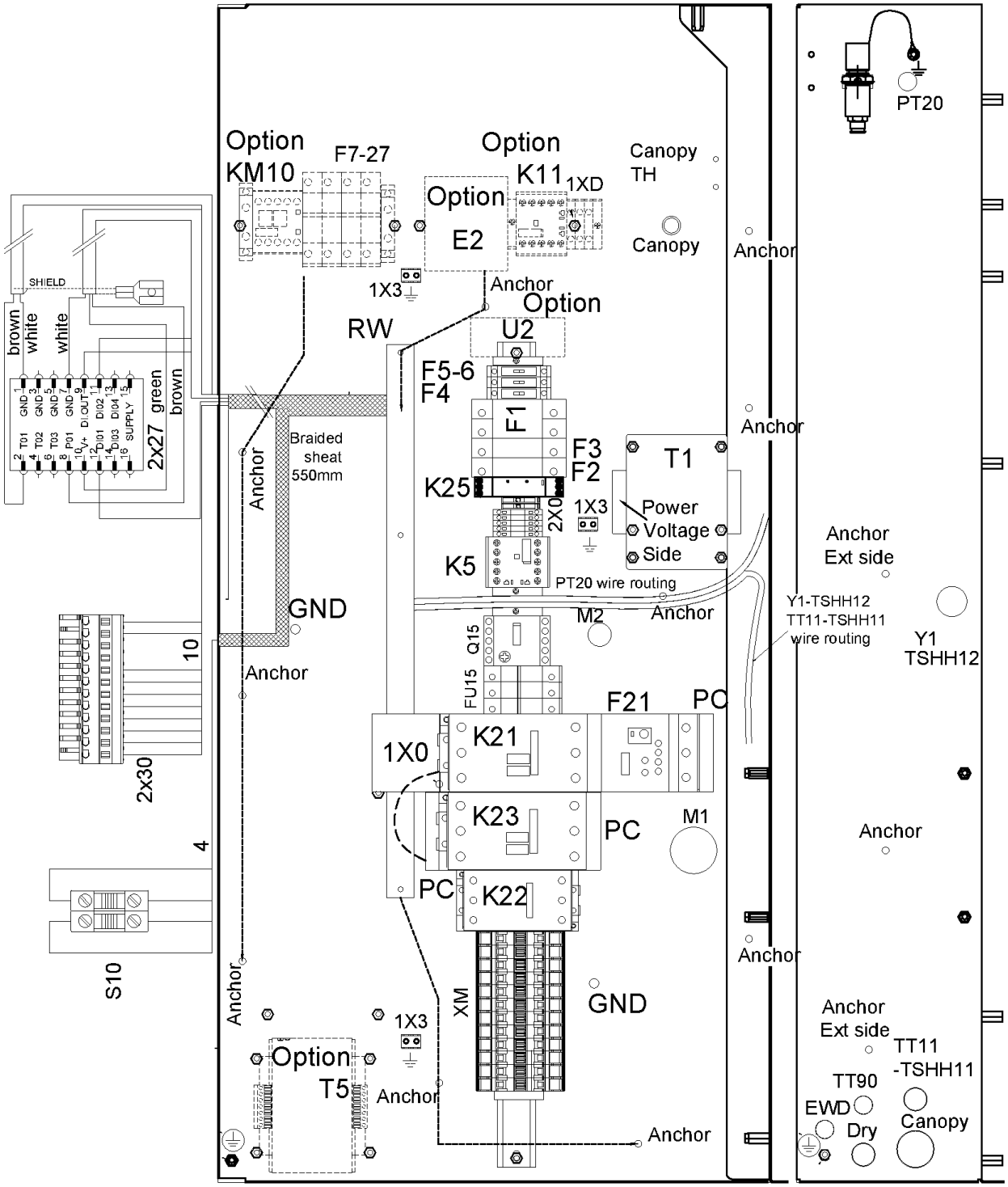
Option
KM10
F7-27
Option
K11
1XD
Option
E2
Canopy
TH
Canopy
Anchor
PT20
1X3
Anchor
Option
U2
RW
F5-6
F4
F1
F3
F2
K25
2X0
1X3
T1
Power
Voltage
Side
K5
PT20 wire routing
Anchor
Anchor
Anchor
Ext side
Y1-TSHH12
TT11-TSHH11
wire routing
Y1
TSHH12
SHIELD
brown
white
white
green
brown
2x27
Braided
sheat
550mm
Anchor
GND
Anchor
M2
Anchor
Q15
FU15
F21
PC
1X0
K21
K23
PC
M1
Anchor
PC
K22
10
2x30
4
S10
Anchor
XM
GND
Anchor
1X3
Option
T5
Anchor
Anchor
Anchor
Ext side
TT11
-TSHH11
TT90
EWD
Dry
Canopy

Ref	Part Number	Qty	Name	Validity	EL
	2205 0325 01	1	CUBICLE	**(21/11/2018 - ...)** MODEL:CPBG20_18J	
	2205 0325 02	1	CUBICLE	**(21/11/2018 - ...)** MODEL:CPBG25_18J	
	2205 0325 03	1	CUBICLE	**(21/11/2018 - ...)** MODEL:CPBG29_18J	
	2205 0325 04	1	CUBICLE	**(21/11/2018 - ...)** MODEL:CPBG34_18J	
	1089 9362 04	1	COVER FOR TERMINAL	**(21/11/2018 - ...)** MODEL:CPBG29_18J , MODEL:CPBG34_18J	1X0
	1089 9216 14	1	TERMINAL BLOCK	**(21/11/2018 - ...)** MODEL:CPBG20_18J , MODEL:CPBG25_18J	1X0
	2202 9049 00	3	INSULATION FOR TERMINAL	**(21/11/2018 - ...)** MODEL:CPBG29_18J , MODEL:CPBG34_18J	1X0
	1622 1692 00	3	CONNECTION ELEMENT	**(21/11/2018 - ...)** MODEL:CPBG29_18J , MODEL:CPBG34_18J	1X0
	1089 9496 94	1	CONTACTOR	**(21/11/2018 - ...)** MODEL:CPBG29_18J	K21
	1089 9496 93	1	CONTACTOR	**(21/11/2018 - ...)** MODEL:CPBG20_18J , MODEL:CPBG25_18J	K21
	1089 9496 95	1	CONTACTOR	**(21/11/2018 - ...)** MODEL:CPBG34_18J	K21
	1089 9216 15	2	COVER	**(21/11/2018 - ...)** MODEL:CPBG29_18J , MODEL:CPBG34_18J	PC
	1089 9216 15	1	COVER	**(21/11/2018 - ...)** MODEL:CPBG20_18J , MODEL:CPBG25_18J	PC
	1089 9496 94	1	CONTACTOR	**(21/11/2018 - ...)** MODEL:CPBG25_18J	K23
	1089 9496 93	1	CONTACTOR	**(21/11/2018 - ...)** MODEL:CPBG20_18J	K23
	1089 9496 96	1	CONTACTOR	**(21/11/2018 - ...)** MODEL:CPBG29_18J , MODEL:CPBG34_18J	K23
	1089 9216 16	1	COVER	**(21/11/2018 - ...)** MODEL:CPBG29_18J , MODEL:CPBG34_18J	PC
	1089 9216 15	2	COVER	**(21/11/2018 - ...)** MODEL:CPBG20_18J , MODEL:CPBG25_18J	PC
	1089 9438 75	1	CONTACTOR	**(21/11/2018 - ...)** MODEL:CPBG25_18J , MODEL:CPBG29_18J	K22
	1089 9438 73	1	CONTACTOR	**(21/11/2018 - ...)** MODEL:CPBG20_18J	K22
	1089 9496 93	1	CONTACTOR	**(21/11/2018 - ...)** MODEL:CPBG34_18J	K22
	1089 9216 15	2	COVER	**(21/11/2018 - ...)** MODEL:CPBG34_18J	PC
	1089 9205 16	1	OVERLOAD RELAY	**(21/11/2018 - ...)** MODEL:CPBG20_18J , MODEL:CPBG25_18J	F21
	1089 9446 97	1	OVERLOAD RELAY	**(21/11/2018 - ...)** MODEL:CPBG29_18J , MODEL:CPBG34_18J	F21
	1089 9267 65	1	OVERLOAD RELAY	**(21/11/2018 - ...)** MODEL:CPBG20_18J , MODEL:CPBG25_18J , MODEL:CPBG29_18J	F21
	1089 9267 66	1	OVERLOAD RELAY	**(21/11/2018 - ...)** MODEL:CPBG34_18J	F21
	0981 2200 03	1	MOUNTING KIT	**(21/11/2018 - ...)**	Q15
	1089 9168 36	3	FUSE	**(21/11/2018 - ...)** MODEL:CPBG20_18J	FU15
	1089 9332 39	3	FUSE MOTOR	**(21/11/2018 - ...)** MODEL:CPBG25_18J , MODEL:CPBG29_18J	
	1089 9168 27	3	FUSE	**(21/11/2018 - ...)** MODEL:CPBG34_18J	
	1089 9594 06	1	FUSE HOLDER	**(21/11/2018 - ...)**	FU15
	1089 9421 85	1	AUX RELAY	**(21/11/2018 - ...)**	K5
	0698 5142 06	1	CABLE GLAND	**(21/11/2018 - ...)** MODEL:CPBG20_18J , MODEL:CPBG25_18J	
	0698 5140 76	1	CABLE GLAND	**(21/11/2018 - ...)** MODEL:CPBG29_18J , MODEL:CPBG34_18J	
	0697 9809 25	1	LOCK NUT	**(21/11/2018 - ...)**	
	0698 5141 17	1	CABLE GLAND	**(21/11/2018 - ...)**	Y1-TSHH12
	0698 5148 72	1	SEAL	**(21/11/2018 - ...)**	Y1-TSHH12
	0697 9809 54	1	LOCK NUT	**(21/11/2018 - ...)**	Y1-TSHH12
	0698 5141 07	1	CABLE GLAND	**(21/11/2018 - ...)**	PT20
	0697 9809 59	1	LOCK NUT	**(21/11/2018 - ...)**	PT20
	0698 5141 21	1	CABLE GLAND	**(21/11/2018 - ...)**	TT11-TSHH11
	0697 9809 53	1	LOCK NUT	**(21/11/2018 - ...)**	TT11-TSHH11
	~~0698 5148 14~~	1	SEAL	**(21/11/2018 - ...)**	TT11-TSHH11
	Substituted by:	0698 5140 72 - CABLE GLAND M20 (quantity: 1)			

Legend:

FREQ:60HZ - Frequency:60 Hz
MODEL:CPBG25_18J - Model:CPBg 25
MOVOL:200230460V - Supply voltage:200-230-460 V
MAPPR:ASME - Pressure Vessel Approval:ASME (U Stamp)
MODEL:CPBG29_18J - Model:CPBg 29
MODEL:CPBG20_18J - Model:CPBg 20
MODEL:CPBG34_18J - Model:CPBg 34

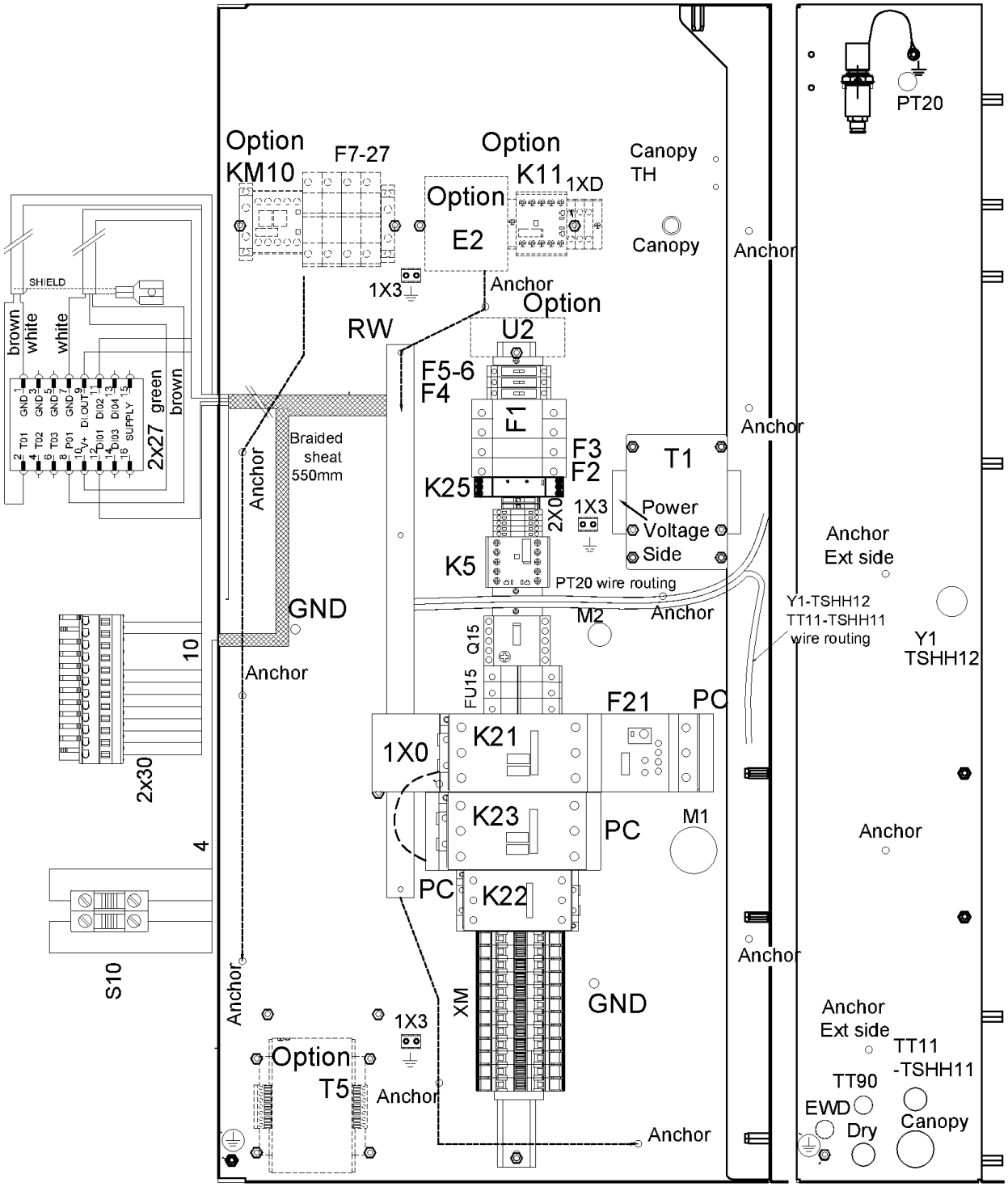
Option
KM10
F7-27
Option
K11
1XD
Option
E2
Canopy
TH
Canopy
Anchor
PT20
1X3
Anchor
Option
U2
RW
F5-6
F4
F1
F3
F2
K25
2X0
1X3
T1
Power
Voltage
Side
K5
PT20 wire routing
Anchor
Ext side
Y1-TSHH12
TT11-TSHH11
wire routing
Y1
TSHH12
M2
Anchor
Q15
FU15
F21
PC
1X0
K21
K23
PC
M1
PC
K22
XM
GND
Anchor
Ext side
TT11
-TSHH11
TT90
EWD
Dry
Canopy
Anchor
SHIELD
brown
white
white
green
brown
2x27
Braided
sheat
550mm
Anchor
GND
Anchor
10
2x30
4
S10
Anchor
1X3
Option
T5
Anchor
Anchor

Ref	Part Number	Qty	Name	Validity	EL
	0698 5141 21	1	CABLE GLAND	(21/11/2018 - ...)	M2
	0697 9809 53	1	LOCK NUT	(21/11/2018 - ...)	M2
	1089 9575 16	1	PHASE SEQUENCE RELAY	(21/11/2018 - ...)	K25
	2202 9691 01	1	TRANSFORMER	(21/11/2018 - ...)	T1
	1089 9168 48	1	FUSE	(21/11/2018 - ...)	F2
	1089 9594 01	1	FUSE HOLDER	(21/11/2018 - ...)	F2
	1089 9168 63	2	FUSE	(21/11/2018 - ...)	F1
	1089 9168 53	2	FUSE	(21/11/2018 - ...)	F1
	1089 9594 02	1	FUSE HOLDER	(21/11/2018 - ...)	F1
	1089 0591 31	1	FUSE	(21/11/2018 - ...)	F3
	1089 9594 01	1	FUSE HOLDER	(21/11/2018 - ...)	F3
	1089 9168 77	2	FUSE	(21/11/2018 - ...)	F5-6
	1088 1510 38	2	FUSE HOLDER	(21/11/2018 - ...)	F5-6
	1088 1510 39	2	END SECTION	(21/11/2018 - ...)	F5-6
	1089 9168 79	1	FUSE	(21/11/2018 - ...)	F4
	1088 1510 38	1	FUSE HOLDER	(21/11/2018 - ...)	F4
	1088 1510 39	1	END SECTION	(21/11/2018 - ...)	F4
	1088 1510 13	5	TERMINAL	(21/11/2018 - ...)	2X0
	1088 1515 16	1	END PLATE	(21/11/2018 - ...)	2X0
	1089 0506 09	2	EARTH-TERMINAL	(21/11/2018 - ...)	2X0
	~~1088 0031 81~~	4	END STOP	(21/11/2018 - ...)	2X0
	Substituted by:	1089 0577 82 - END RETAINER (quantity: 1)			
	1088 0031 74	12	TERMINAL	(21/11/2018 - ...)	XM
	1088 0031 99	1	END PLATE	(21/11/2018 - ...)	XM
	1088 0031 96	6	JUMPER	(21/11/2018 - ...)	XM
	~~1088 0031 81~~	2	END STOP	(21/11/2018 - ...)	XM
	Substituted by:	1089 0577 82 - END RETAINER (quantity: 1)			
	0694 5900 05	3	TAB	(21/11/2018 - ...)	1X3
	1088 0037 81	1	CONNECTOR	(21/11/2018 - ...)	2X27
	1088 0031 32	1	CONNECTOR	(21/11/2018 - ...)	2X30
	1088 0037 31	1	CONNECTOR 3-POLE	(21/11/2018 - ...)	X109
	1089 9513 89	1	EMERGENCY STOP PUSH BUTTON	(21/11/2018 - ...)	S10
	1089 9482 98	2	NC CONTACT	(21/11/2018 - ...)	S10
	1089 9482 95	1	MODULE HOLDER	(21/11/2018 - ...)	S10
	1089 9125 13	1	DECAL	(21/11/2018 - ...)	S10
	1088 0153 03	1	CONNECTION HEAD	(21/11/2018 - ...)	XY1
	1088 0021 92	1	CONNECTOR	(21/11/2018 - ...)	XTT11-TSHH1
	1088 0021 93	4	TERMINAL PIN	(21/11/2018 - ...)	XTT11-TSHH1
	2204 1039 00	1	PRESSURE SENSOR	(21/11/2018 - ...)	PT20
	1088 0021 59	1	CONNECTOR FEMALE	(21/11/2018 - ...)	PT20
	1088 0021 60	3	WIRE SEAL	(21/11/2018 - ...)	PT20
	1088 0021 61	3	TERMINAL PIN	(21/11/2018 - ...)	PT20
	2204 1407 00	1	STRAIGHT FITTING	(21/11/2018 - ...)	PT20
	0348 0110 03	1	ANCHOR PLATE	(21/11/2018 - ...)	PT20
	0348 0101 13	1	CABLE TIE	(21/11/2018 - ...)	PT20
	6236 3126 00	12	ANCHOR	(21/11/2018 - ...)	
	2204 1487 00	1	CUBICLE BOX	(21/11/2018 - ...)	
	2205 0325 00	2	SERVICE DIAGRAM	(21/11/2018 - ...)	
	2205 0325 10	2	ELECTRICAL LIST	(21/11/2018 - ...)	
	2200 7723 35	1	GLOSSARY ELECTRICAL PARTS	(21/11/2018 - ...)	

Legend:

FREQ:60HZ - Frequency:60 Hz
MODEL:CPBG25_18J - Model:CPBg 25
MOVOL:200230460V - Supply voltage:200-230-460 V
MAPPR:ASME - Pressure Vessel Approval:ASME (U Stamp)
MODEL:CPBG29_18J - Model:CPBg 29
MODEL:CPBG20_18J - Model:CPBg 20
MODEL:CPBG34_18J - Model:CPBg 34

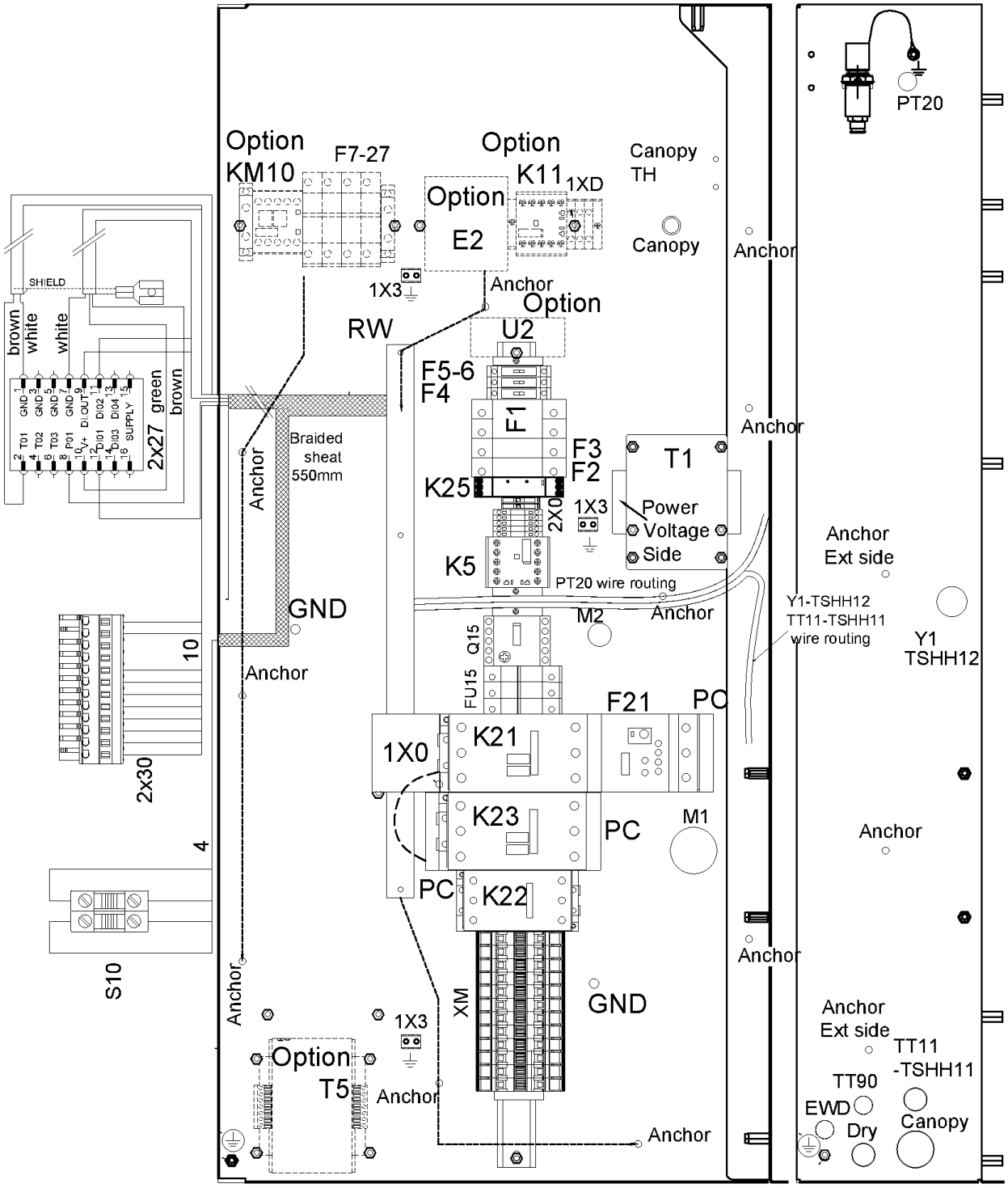
PT20
Option
KM10
F7-27
Option
K11
1XD
Option
E2
Canopy
TH
Canopy
Anchor
1X3
Anchor
Option
U2
RW
F5-6
F4
F1
F3
F2
K25
2X0
1X3
T1
Power
Voltage
Side
K5
PT20 wire routing
Anchor
Anchor
Braided
sheat
550mm
Anchor
GND
Anchor
M2
Anchor
Anchor
Ext side
Y1-TSHH12
TT11-TSHH11
wire routing
Y1
TSHH12
Q15
FU15
F21
PC
1X0
K21
K23
PC
M1
Anchor
PC
K22
Anchor
XM
GND
Anchor
Ext side
TT11
-TSHH11
TT90
EWD
Dry
Canopy
1X3
Option
T5
Anchor
Anchor
SHIELD
brown
white
white
green
brown
2x27
10
2x30
4
S10
Anchor

Ref	Part Number	Qty	Name	Validity	EL
	2204 2198 01	1	LABEL	(21/11/2018 - ...)	
	2204 2198 11	1	LABEL	(21/11/2018 - ...)	
	2204 2198 21	1	LABEL	(21/11/2018 - ...)	
	2202 8788 01	1	LABEL	(21/11/2018 - ...)	
	2202 2610 04	1	LABEL	(21/11/2018 - ...)	
	2202 2610 70	1	LABEL	(21/11/2018 - ...)	
	2203 0541 10	1	LABEL	(21/11/2018 - ...)	
	~~1089 0362 50~~	2	SWITCH	(21/11/2018 - ...) MODEL:CPBG29_18J	
	Substituted by:	1089 9482 98 - NC CONTACT 3SU1400-1AA10-1CA0 (quantity: 1)			

Legend:

FREQ:60HZ - Frequency:60 Hz
MAPPR:ASME - Pressure Vessel Approval:ASME (U Stamp)
MODEL:CPBG20_18J - Model:CPBg 20
MODEL:CPBG25_18J - Model:CPBg 25
MODEL:CPBG29_18J - Model:CPBg 29
MODEL:CPBG34_18J - Model:CPBg 34
MOVOL:200230460V - Supply voltage:200-230-460 V

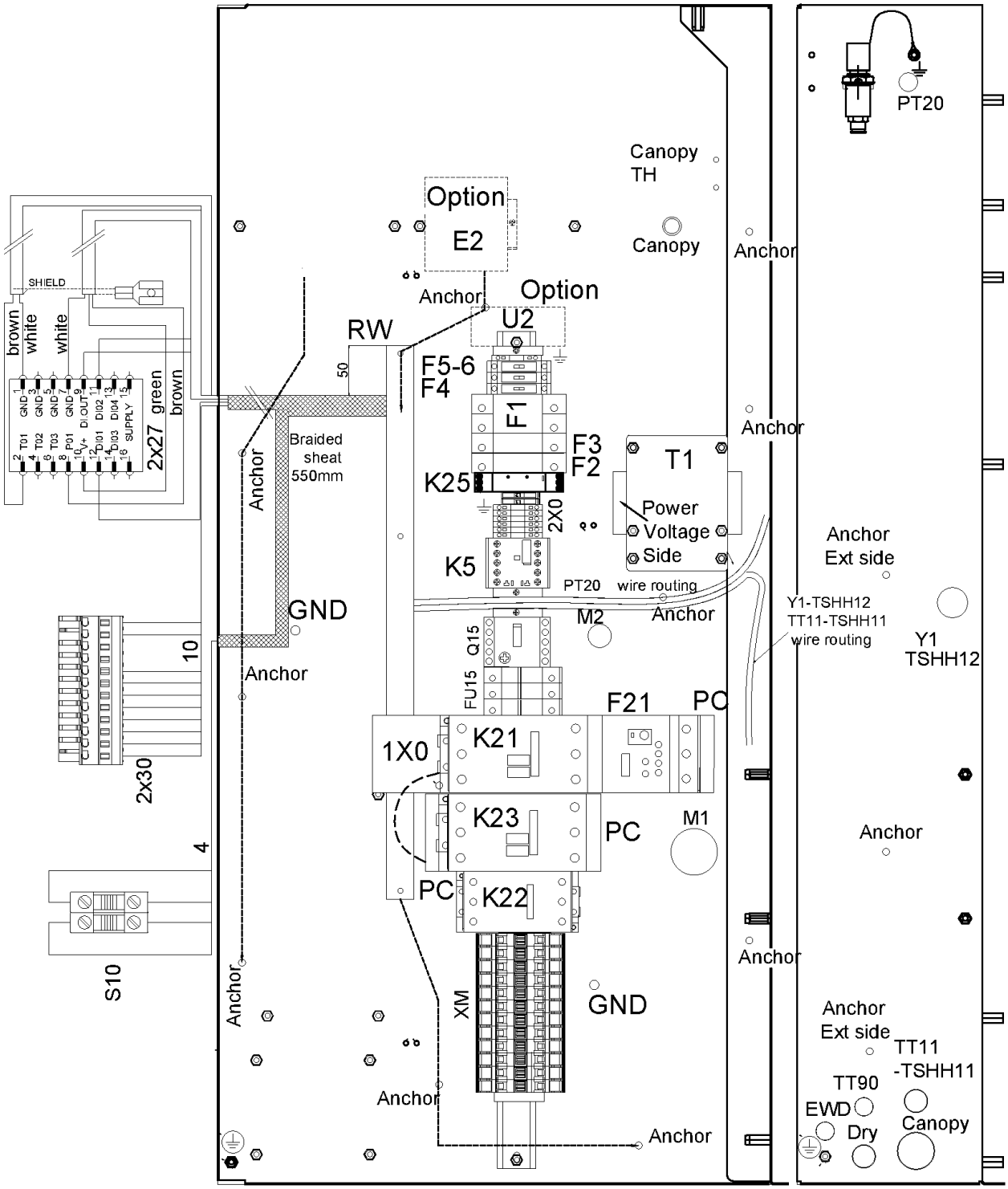
PT20
Canopy
TH
Canopy
Anchor
Option
E2
Anchor
Option
U2
RW
50
F5-6
F4
F1
F3
F2
K25
2X0
K5
T1
Power
Voltage
Side
Anchor
Anchor
Ext side
PT20
wire routing
Y1-TSHH12
TT11-TSHH11
wire routing
Y1
TSHH12
M2
Anchor
Q15
FU15
F21
PC
1X0
K21
K23
PC
M1
PC
K22
Anchor
XM
GND
Anchor
Ext side
TT11
-TSHH11
TT90
EWD
Dry
Canopy
Anchor
Anchor
Anchor
Anchor
Anchor
Braided
sheat
550mm
GND
10
2x30
4
S10
SHIELD
brown
white
white
green
brown
2x27
GND 1
GND 3
GND 5
GND 7
DI OUT 9
DI02 11
DI04 13
SUPPLY 15
2 T01
4 T02
6 T03
8 P01
10 V+
12 DI01
14 DI03
16

38 - Cubicle components CPBg 20-34 - 200230460V - CRNSASME - Without dryer - Gear driven

(MODEL:CPBG20_18J , MODEL:CPBG25_18J , MODEL:CPBG29_18J , MODEL:CPBG34_18J) + FREQ:60HZ + IDRY:N + MAPPR:CRNASME + MOVOL:200230460V

Ref	Part Number	Qty	Name	Validity	EL
	2205 0325 21	1	CUBICLE	**(28/02/2019 - ...)** MODEL:CPBG20_18J	
	2205 0325 22	1	CUBICLE	**(28/02/2019 - ...)** MODEL:CPBG25_18J	
	2205 0325 23	1	CUBICLE	**(28/02/2019 - ...)** MODEL:CPBG29_18J	
	2205 0325 24	1	CUBICLE	**(28/02/2019 - ...)** MODEL:CPBG34_18J	
	1089 9216 14	1	TERMINAL BLOCK	**(28/02/2019 - ...)** MODEL:CPBG20_18J , MODEL:CPBG25_18J	1X0
	1089 9362 04	1	COVER FOR TERMINAL	**(28/02/2019 - ...)** MODEL:CPBG29_18J , MODEL:CPBG34_18J	1X0
	2202 9049 00	3	INSULATION FOR TERMINAL	**(28/02/2019 - ...)** MODEL:CPBG29_18J , MODEL:CPBG34_18J	1X0
	1622 1692 00	3	CONNECTION ELEMENT	**(28/02/2019 - ...)** MODEL:CPBG29_18J , MODEL:CPBG34_18J	1X0
	1089 9496 93	1	CONTACTOR	**(28/02/2019 - ...)** MODEL:CPBG20_18J , MODEL:CPBG25_18J	K21
	1089 9496 94	1	CONTACTOR	**(28/02/2019 - ...)** MODEL:CPBG29_18J	K21
	1089 9496 95	1	CONTACTOR	**(28/02/2019 - ...)** MODEL:CPBG34_18J	K21
	1089 9216 15	2	COVER	**(28/02/2019 - ...)** MODEL:CPBG29_18J , MODEL:CPBG34_18J	PC
	1089 9216 15	1	COVER	**(28/02/2019 - ...)** MODEL:CPBG20_18J , MODEL:CPBG25_18J	PC
	1089 9496 93	1	CONTACTOR	**(28/02/2019 - ...)** MODEL:CPBG20_18J	K23
	1089 9496 94	1	CONTACTOR	**(28/02/2019 - ...)** MODEL:CPBG25_18J	K23
	1089 9496 96	1	CONTACTOR	**(28/02/2019 - ...)** MODEL:CPBG29_18J , MODEL:CPBG34_18J	K23
	1089 9216 15	2	COVER	**(28/02/2019 - ...)** MODEL:CPBG20_18J , MODEL:CPBG25_18J	PC
	1089 9216 16	1	COVER	**(28/02/2019 - ...)** MODEL:CPBG29_18J , MODEL:CPBG34_18J	PC
	1089 9496 93	1	CONTACTOR	**(28/02/2019 - ...)** MODEL:CPBG34_18J	K22
	1089 9438 75	1	CONTACTOR	**(28/02/2019 - ...)** MODEL:CPBG25_18J , MODEL:CPBG29_18J	K22
	1089 9438 73	1	CONTACTOR	**(28/02/2019 - ...)** MODEL:CPBG20_18J	K22
	1089 9216 15	2	COVER	**(28/02/2019 - ...)** MODEL:CPBG34_18J	PC
	1089 9446 97	1	OVERLOAD RELAY	**(28/02/2019 - ...)** MODEL:CPBG29_18J , MODEL:CPBG34_18J	F21
	1089 9205 16	1	OVERLOAD RELAY	**(28/02/2019 - ...)** MODEL:CPBG20_18J , MODEL:CPBG25_18J	F21
	1089 9267 65	1	OVERLOAD RELAY	**(28/02/2019 - ...)** MODEL:CPBG20_18J , MODEL:CPBG25_18J , MODEL:CPBG29_18J	F21
	1089 9267 66	1	OVERLOAD RELAY	**(28/02/2019 - ...)** MODEL:CPBG34_18J	F21
	0981 2200 03	1	MOUNTING KIT	**(28/02/2019 - ...)**	
	1089 9332 39	3	FUSE MOTOR	**(28/02/2019 - ...)** MODEL:CPBG25_18J , MODEL:CPBG29_18J	FU15
	1089 9168 27	3	FUSE	**(28/02/2019 - ...)** MODEL:CPBG34_18J	
	1089 9168 36	3	FUSE	**(28/02/2019 - ...)** MODEL:CPBG20_18J	FU15
	1089 9594 06	1	HOLDER FUSE	**(28/02/2019 - ...)**	FU15
	1089 9421 85	1	AUX RELAY	**(28/02/2019 - ...)**	K5
	0698 5142 06	1	CABLE GLAND	**(28/02/2019 - ...)** MODEL:CPBG20_18J , MODEL:CPBG25_18J	
	0698 5140 76	1	CABLE GLAND	**(28/02/2019 - ...)** MODEL:CPBG29_18J , MODEL:CPBG34_18J	
	0697 9809 25	1	LOCK NUT	**(28/02/2019 - ...)**	
	0698 5141 17	1	CABLE GLAND	**(28/02/2019 - ...)**	Y1-TSHH12
	0698 5148 72	1	SEAL	**(28/02/2019 - ...)**	Y1-TSHH12
	0697 9809 54	1	LOCK NUT	**(28/02/2019 - ...)**	Y1-TSHH12
	0698 5141 07	1	CABLE GLAND	**(28/02/2019 - ...)**	PT20
	0697 9809 59	1	NUT LOCK	**(28/02/2019 - ...)**	PT20
	0698 5141 21	1	CABLE GLAND	**(28/02/2019 - ...)**	TT11-TSHH11
	0697 9809 53	1	LOCK NUT	**(28/02/2019 - ...)**	TT11-TSHH11
	~~0698 5148 14~~	1	SEAL	**(28/02/2019 - ...)**	TT11-TSHH11

Legend:

FREQ:60HZ - Frequency:60 Hz
MODEL:CPBG20_18J - Model:CPBg 20
MODEL:CPBG34_18J - Model:CPBg 34
IDRY:N - Integrated dryer:No
MODEL:CPBG25_18J - Model:CPBg 25
MOVOL:200230460V - Supply voltage:200-230-460 V
MAPPR:CRNASME - Pressure Vessel Approval:CRN (based on ASME)
MODEL:CPBG29_18J - Model:CPBg 29

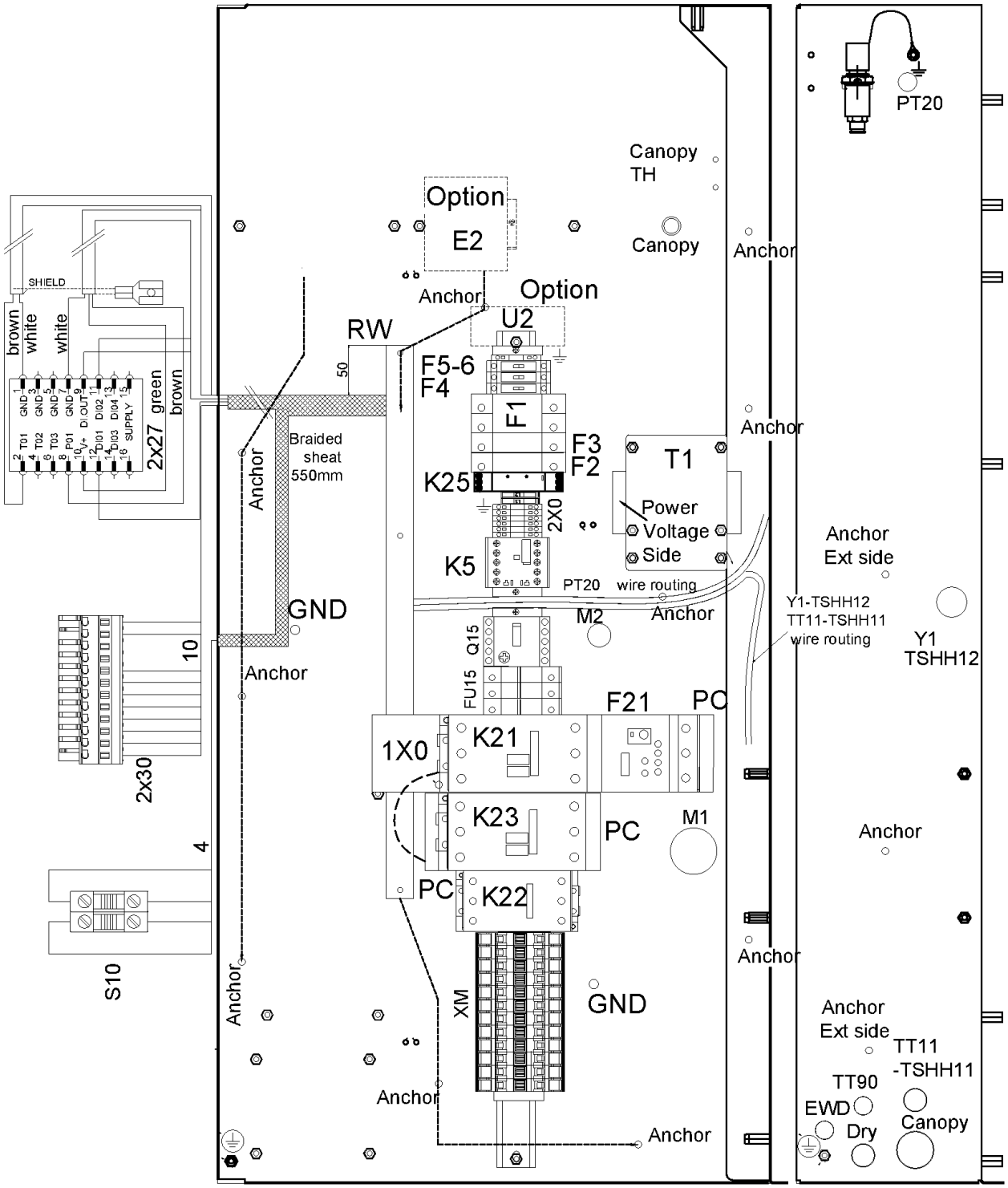
PT20
Canopy
TH
Canopy
Anchor
Option
E2
Anchor
Option
U2
RW
50
F5-6
F4
F1
F3
F2
K25
2X0
K5
T1
Power
Voltage
Side
Anchor
Anchor
Ext side
PT20
wire routing
Y1-TSHH12
TT11-TSHH11
wire routing
Y1
TSHH12
M2
Anchor
Q15
FU15
F21
PC
1X0
K21
K23
PC
M1
PC
K22
Anchor
XM
GND
Anchor
Ext side
TT11
-TSHH11
TT90
EWD
Dry
Canopy
Anchor
SHIELD
brown
white
white
green
brown
2x27
GND 1
GND 3
GND 5
GND 7
DI OUT 9
DI02 11
DI04 13
SUPPLY 15
T01 2
T02 4
T03 6
P01 8
V+ 10
DI01 12
DI03 14
16
Braided
sheat
550mm
Anchor
GND
Anchor
10
2x30
4
S10
Anchor
Anchor

Ref	Part Number	Qty	Name	Validity	EL
	Substituted by:	0698 5140 72 - CABLE GLAND M20 (quantity: 1)			
	0698 5141 21	1	CABLE GLAND	(28/02/2019 - ...)	M2
	0697 9809 53	1	LOCK NUT	(28/02/2019 - ...)	M2
	1089 9575 16	1	PHASE SEQUENCE RELAY	(28/02/2019 - ...)	K25
	2202 9691 01	1	TRANSFORMER	(28/02/2019 - ...)	T1
	1089 9168 48	1	FUSE	(28/02/2019 - ...)	F2
	1089 9594 01	1	FUSE HOLDER	(28/02/2019 - ...)	F2
	1089 9168 63	2	FUSE	(28/02/2019 - ...)	F1
	1089 9168 53	2	FUSE	(28/02/2019 - ...)	F1
	1089 9594 02	1	FUSE HOLDER	(28/02/2019 - ...)	F1
	1089 0591 31	1	FUSE	(28/02/2019 - ...)	F3
	1089 9594 01	1	FUSE HOLDER	(28/02/2019 - ...)	F3
	1089 9168 77	2	FUSE	(28/02/2019 - ...)	F5-6
	1088 1510 38	2	FUSE HOLDER	(28/02/2019 - ...)	F5-6
	1088 1510 39	2	END SECTION	(28/02/2019 - ...)	F5-6
	1089 9168 79	1	FUSE	(28/02/2019 - ...)	F4
	1088 1510 38	1	FUSE HOLDER	(28/02/2019 - ...)	F4
	1088 1510 39	1	END SECTION	(28/02/2019 - ...)	F4
	1088 1510 13	5	TERMINAL	(28/02/2019 - ...)	2X0
	1088 1515 16	1	END PLATE	(28/02/2019 - ...)	2X0
	1089 0506 09	2	EARTH-TERMINAL	(28/02/2019 - ...)	2X0
	~~1088 0031 81~~	4	END STOP	(28/02/2019 - ...)	2X0
	Substituted by:	1089 0577 82 - END RETAINER (quantity: 1)			
	1088 1510 10	2	EARTH TERMINAL	(28/02/2019 - ...)	2X0
	1088 1510 14	2	TERMINAL	(28/02/2019 - ...)	2X0
	1088 0031 74	12	TERMINAL	(28/02/2019 - ...)	XM
	1088 0031 99	1	END PLATE	(28/02/2019 - ...)	XM
	1088 0031 96	6	JUMPER	(28/02/2019 - ...)	XM
	~~1088 0031 81~~	2	END STOP	(28/02/2019 - ...)	XM
	Substituted by:	1089 0577 82 - END RETAINER (quantity: 1)			
	1088 0037 81	1	CONNECTOR	(28/02/2019 - ...)	2X27
	1088 0031 32	1	CONNECTOR	(28/02/2019 - ...)	2X30
	1088 0037 31	1	CONNECTOR 3-POLE	(28/02/2019 - ...)	X109
	1089 9513 89	1	EMERGENCY STOP PUSH BUTTON	(28/02/2019 - ...)	S10
	1089 9482 98	2	NC CONTACT	(28/02/2019 - ...)	S10
	1089 9482 95	1	MODULE HOLDER	(28/02/2019 - ...)	S10
	1089 9125 13	1	DECAL	(28/02/2019 - ...)	S10
	1088 0153 03	1	CONNECTION HEAD	(28/02/2019 - ...)	XY1
	1088 0021 92	1	CONNECTOR	(28/02/2019 - ...)	XTT11-TSHH1
	1088 0021 93	4	TERMINAL PIN	(28/02/2019 - ...)	XTT11-TSHH1
	2204 1039 00	1	PRESSURE SENSOR	(28/02/2019 - ...)	PT20
	1088 0021 59	1	CONNECTOR FEMALE	(28/02/2019 - ...)	PT20
	1088 0021 60	3	WIRE SEAL	(28/02/2019 - ...)	PT20
	1088 0021 61	3	TERMINAL PIN	(28/02/2019 - ...)	PT20
	2204 1407 00	1	STRAIGHT FITTING	(28/02/2019 - ...)	PT20
	0348 0110 03	1	ANCHOR PLATE	(28/02/2019 - ...)	PT20
	0348 0101 13	1	CABLE TIE	(28/02/2019 - ...)	PT20
	6236 3126 00	12	ANCHOR	(28/02/2019 - ...)	
	2204 1487 00	1	CUBICLE BOX	(28/02/2019 - ...)	
	2205 0325 09	2	SERVICE DIAGRAM	(28/02/2019 - ...)	

Legend:

FREQ:60HZ - Frequency:60 Hz
MODEL:CPBG20_18J - Model:CPBg 20
MODEL:CPBG34_18J - Model:CPBg 34
IDRY:N - Integrated dryer:No
MODEL:CPBG25_18J - Model:CPBg 25
MOVOL:200230460V - Supply voltage:200-230-460 V
MAPPR:CRNASME - Pressure Vessel Approval:CRN (based on ASME)
MODEL:CPBG29_18J - Model:CPBg 29

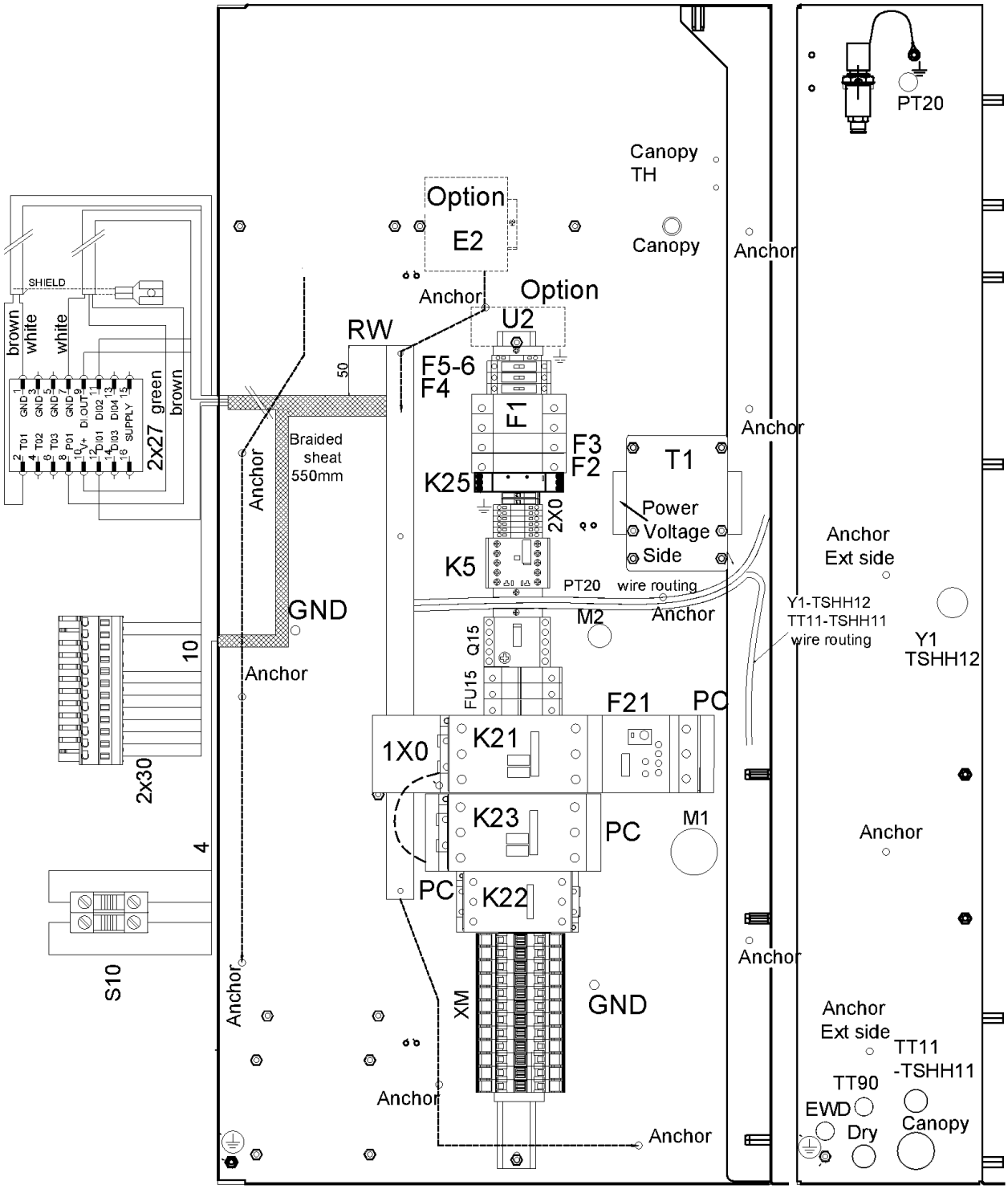
PT20
Canopy
TH
Canopy
Anchor
Option
E2
Anchor
Option
U2
RW
50
F5-6
F4
F1
F3
F2
K25
2X0
K5
T1
Power
Voltage
Side
Anchor
Anchor
Ext side
PT20
wire routing
Y1-TSHH12
TT11-TSHH11
wire routing
Y1
TSHH12
M2
Anchor
GND
Anchor
Braided
sheat
550mm
Anchor
SHIELD
brown
white
white
green
brown
2x27
GND 1
GND 3
GND 5
GND 7
DI OUT 9
DI02 11
DI04 13
SUPPLY 15
T01 2
T02 4
T03 6
P01 8
V+ 10
DI01 12
DI03 14
16
10
2x30
4
S10
Q15
FU15
F21
PC
1X0
K21
K23
PC
M1
PC
K22
XM
GND
Anchor
Anchor
Anchor
Anchor
Anchor
Ext side
TT11
-TSHH11
TT90
EWD
Dry
Canopy

38 - Cubicle components CPBg 20-34 - 200230460V - CRNSASME - Without dryer - Gear driven

(MODEL:CPBG20_18J , MODEL:CPBG25_18J , MODEL:CPBG29_18J , MODEL:CPBG34_18J) + FREQ:60HZ + IDRY:N + MAPPR:CRNASME + MOVOL:200230460V

Ref	Part Number	Qty	Name	Validity	EL
	2205 0325 11	2	ELECTRICAL LIST	(28/02/2019 - ...)	
	2200 7723 35	1	GLOSSARY ELECTRICAL PARTS	(28/02/2019 - ...)	
	2204 2198 01	1	LABEL	(28/02/2019 - ...)	
	2204 2198 11	1	LABEL	(28/02/2019 - ...)	
	2204 2198 21	1	LABEL	(28/02/2019 - ...)	
	2202 8788 01	1	LABEL	(28/02/2019 - ...)	
	2202 2610 04	1	LABEL	(28/02/2019 - ...)	
	2202 2610 70	1	LABEL	(28/02/2019 - ...)	
	2203 0541 10	1	LABEL	(28/02/2019 - ...)	

Legend:

FREQ:60HZ - Frequency:60 Hz
MODEL:CPBG20_18J - Model:CPBg 20
MODEL:CPBG34_18J - Model:CPBg 34
IDRY:N - Integrated dryer:No
MODEL:CPBG25_18J - Model:CPBg 25
MOVOL:200230460V - Supply voltage:200-230-460 V
MAPPR:CRNASME - Pressure Vessel Approval:CRN (based on ASME)
MODEL:CPBG29_18J - Model:CPBg 29

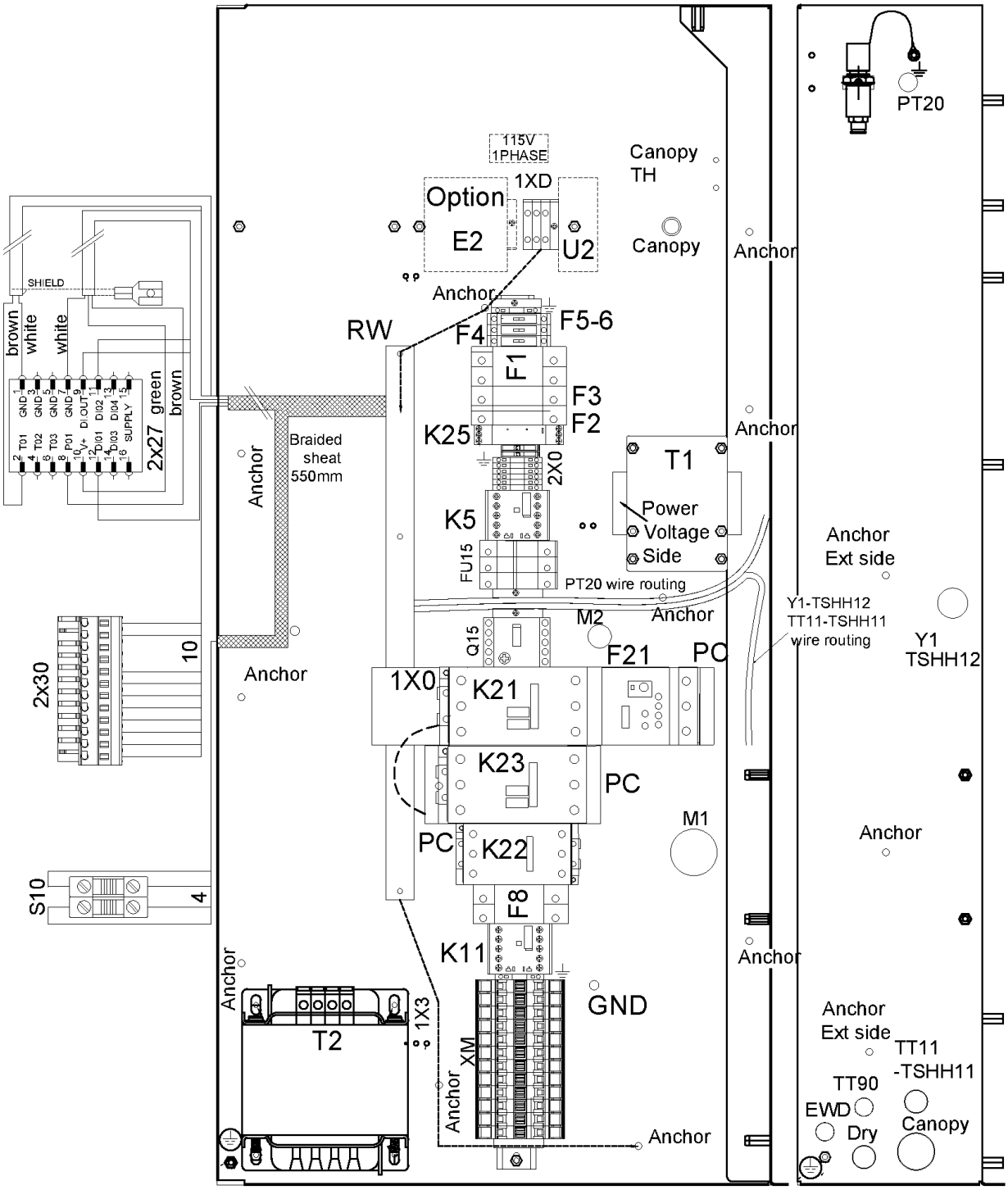
PT20
115V
1PHASE
Canopy
TH
Option
1XD
E2
U2
Canopy
Anchor
Anchor
RW
F4
F5-6
F1
F3
F2
K25
2X0
T1
Power
Voltage
Side
K5
FU15
PT20 wire routing
Anchor
Ext side
Y1-TSHH12
TT11-TSHH11
wire routing
Y1
TSHH12
M2
Anchor
Q15
F21
PC
1X0
K21
K23
PC
M1
PC
K22
F8
K11
GND
Anchor
Anchor
Ext side
TT11
-TSHH11
TT90
EWD
Dry
Canopy
Anchor
SHIELD
brown
white
white
green
brown
2x27
Braided
sheat
550mm
Anchor
2x30
10
S10
4
Anchor
T2
1X3
XM
Anchor
Anchor

39 - Cubicle components CPBg 20-34 - 200230460V - CRNSASME - With dryer - Gear driven

(MODEL:CPBG20_18J , MODEL:CPBG25_18J , MODEL:CPBG29_18J , MODEL:CPBG34_18J) + FREQ:60HZ + IDRY:Y + MAPPR:CRNASME + MOVOL:200230460V

Ref	Part Number	Qty	Name	Validity	EL
	2205 0325 31	1	CUBICLE	(21/11/2018 - ...) MODEL:CPBG20_18J	
	2205 0325 32	1	CUBICLE	(21/11/2018 - ...) MODEL:CPBG25_18J	
	2205 0325 33	1	CUBICLE	(21/11/2018 - ...) MODEL:CPBG29_18J	
	2205 0325 34	1	CUBICLE	(21/11/2018 - ...) MODEL:CPBG34_18J	
	1089 9216 14	1	TERMINAL BLOCK	(21/11/2018 - ...) MODEL:CPBG20_18J , MODEL:CPBG25_18J	1X0
	1089 9362 04	1	COVER FOR TERMINAL	(21/11/2018 - ...) MODEL:CPBG29_18J , MODEL:CPBG34_18J	1X0
	2202 9049 00	3	INSULATION FOR TERMINAL	(21/11/2018 - ...) MODEL:CPBG29_18J , MODEL:CPBG34_18J	1X0
	1622 1692 00	3	CONNECTION ELEMENT	(21/11/2018 - ...) MODEL:CPBG29_18J , MODEL:CPBG34_18J	1X0
	1088 1510 43	2	TERMINAL	(21/11/2018 - ...)	1XD
	1088 1510 44	3	END SECTION	(21/11/2018 - ...)	1XD
	1088 1510 19	1	TERMINAL	(21/11/2018 - ...)	1XD
	1089 9496 94	1	CONTACTOR	(21/11/2018 - ...) MODEL:CPBG29_18J	K23
	1089 9496 95	1	CONTACTOR	(21/11/2018 - ...) MODEL:CPBG34_18J	K23
	1089 9496 93	1	CONTACTOR	(21/11/2018 - ...) MODEL:CPBG20_18J , MODEL:CPBG25_18J	K23
	1089 9216 15	2	COVER	(21/11/2018 - ...) MODEL:CPBG29_18J , MODEL:CPBG34_18J	PC
	1089 9216 15	1	COVER	(21/11/2018 - ...) MODEL:CPBG20_18J , MODEL:CPBG25_18J	PC
	1089 9496 96	1	CONTACTOR	(21/11/2018 - ...) MODEL:CPBG29_18J , MODEL:CPBG34_18J	K21
	1089 9496 94	1	CONTACTOR	(21/11/2018 - ...) MODEL:CPBG25_18J	K21
	1089 9496 93	1	CONTACTOR	(21/11/2018 - ...) MODEL:CPBG20_18J	K21
	1089 9216 15	2	COVER	(21/11/2018 - ...) MODEL:CPBG20_18J , MODEL:CPBG25_18J	PC
	1089 9216 16	1	COVER	(21/11/2018 - ...) MODEL:CPBG29_18J , MODEL:CPBG34_18J	PC
	1089 9438 75	1	CONTACTOR	(21/11/2018 - ...) MODEL:CPBG25_18J , MODEL:CPBG29_18J	K22
	1089 9438 73	1	CONTACTOR	(21/11/2018 - ...) MODEL:CPBG20_18J	K22
	1089 9496 93	1	CONTACTOR	(21/11/2018 - ...) MODEL:CPBG34_18J	K22
	1089 9216 15	2	COVER	(21/11/2018 - ...) MODEL:CPBG34_18J	PC
	1089 9205 16	1	OVERLOAD RELAY	(21/11/2018 - ...) MODEL:CPBG20_18J , MODEL:CPBG25_18J	F21
	1089 9446 97	1	OVERLOAD RELAY	(21/11/2018 - ...) MODEL:CPBG29_18J , MODEL:CPBG34_18J	F21
	1089 9267 66	1	OVERLOAD RELAY	(21/11/2018 - ...) MODEL:CPBG34_18J	F21
	1089 9267 65	1	OVERLOAD RELAY	(21/11/2018 - ...) MODEL:CPBG20_18J , MODEL:CPBG25_18J , MODEL:CPBG29_18J	F21
	0981 2200 03	1	MOUNTING KIT	(21/11/2018 - ...)	
	1089 9168 36	3	FUSE	(21/11/2018 - ...) MODEL:CPBG20_18J	FU15
	1089 9168 27	3	FUSE	(21/11/2018 - ...) MODEL:CPBG34_18J	
	1089 9332 39	3	FUSE MOTOR	(21/11/2018 - ...) MODEL:CPBG25_18J , MODEL:CPBG29_18J	FU15
	1089 9594 06	1	FUSE HOLDER	(21/11/2018 - ...)	FU15
	1089 9421 85	1	AUX RELAY	(21/11/2018 - ...)	K5
	1089 9438 47	1	CONTACTOR	(21/11/2018 - ...)	K11
	0698 5140 76	1	CABLE GLAND	(21/11/2018 - ...) MODEL:CPBG29_18J , MODEL:CPBG34_18J	
	0698 5142 06	1	CABLE GLAND	(21/11/2018 - ...) MODEL:CPBG20_18J , MODEL:CPBG25_18J	
	0697 9809 25	1	LOCK NUT	(21/11/2018 - ...)	
	0698 5141 17	1	CABLE GLAND	(21/11/2018 - ...)	Y1-TSHH12
	0698 5148 72	1	SEAL	(21/11/2018 - ...)	Y1-TSHH12
	0697 9809 54	1	LOCK NUT	(21/11/2018 - ...)	Y1-TSHH12
	0698 5141 07	1	CABLE GLAND	(21/11/2018 - ...)	PT20

Legend:

FREQ:60HZ - Frequency:60 Hz
MODEL:CPBG20_18J - Model:CPBg 20
MODEL:CPBG34_18J - Model:CPBg 34
IDRY:Y - Integrated dryer:Yes
MODEL:CPBG25_18J - Model:CPBg 25
MOVOL:200230460V - Supply voltage:200-230-460 V
MAPPR:CRNASME - Pressure Vessel Approval:CRN (based on ASME)
MODEL:CPBG29_18J - Model:CPBg 29

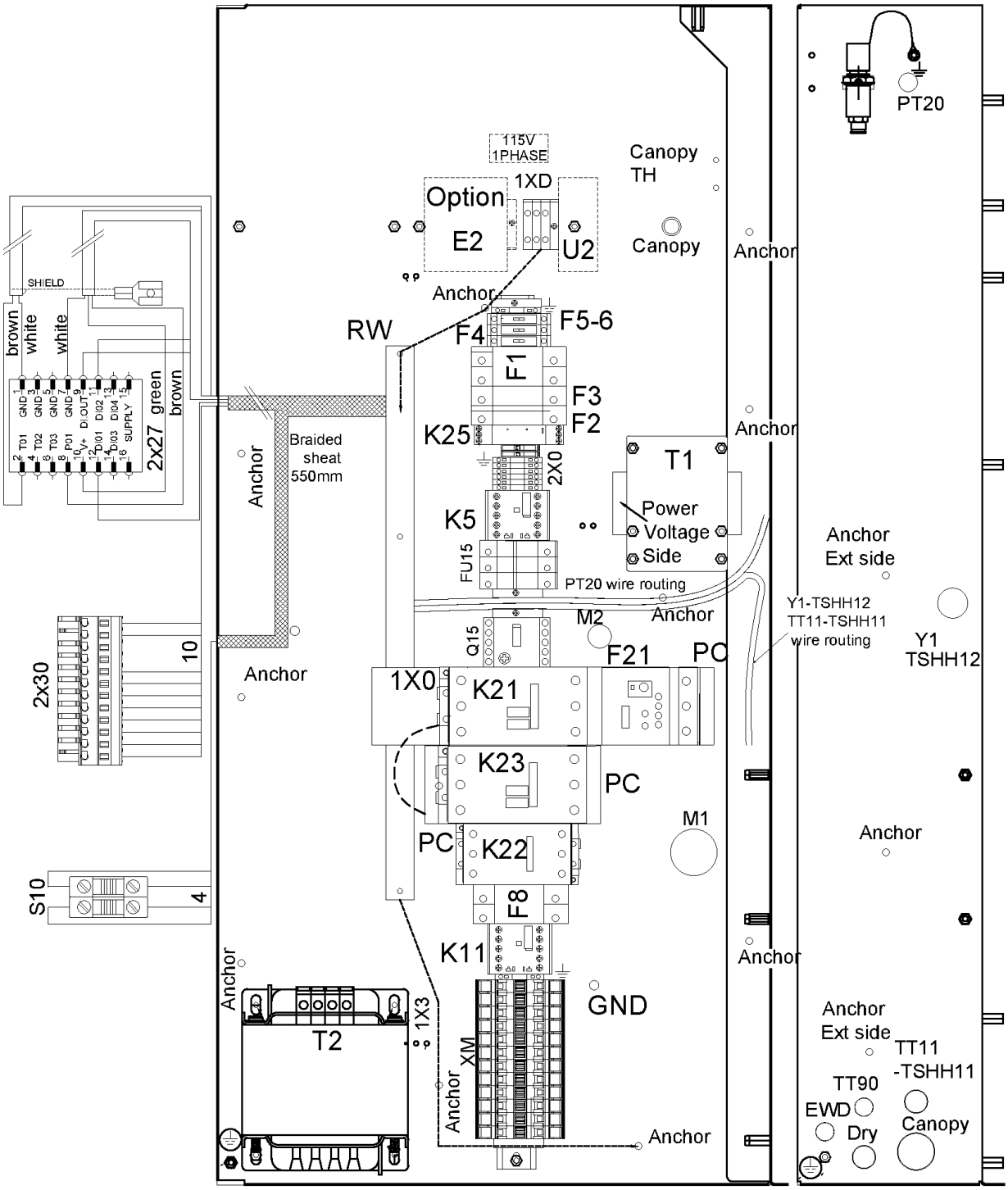
PT20
115V
1PHASE
Canopy
TH
Option
1XD
E2
U2
Canopy
Anchor
Anchor
RW
F4
F5-6
F1
F3
F2
K25
2X0
T1
Power
Voltage
Side
K5
FU15
PT20 wire routing
Anchor
Ext side
Y1-TSHH12
TT11-TSHH11
wire routing
Y1
TSHH12
M2
Anchor
Q15
F21
PC
1X0
K21
K23
PC
M1
PC
K22
F8
K11
GND
Anchor
Anchor
Ext side
TT11
-TSHH11
TT90
EWD
Dry
Canopy
Anchor
T2
1X3
XM
Anchor
Anchor
SHIELD
brown
white
white
green
brown
2x27
Braided
sheat
550mm
Anchor
2x30
10
S10
4

Ref	Part Number	Qty	Name	Validity	EL
	0697 9809 59	1	LOCK NUT	(21/11/2018 - ...)	PT20
	0698 5141 21	1	CABLE GLAND	(21/11/2018 - ...)	TT11-TSHH11
	0697 9809 53	1	LOCK NUT	(21/11/2018 - ...)	TT11-TSHH11
	~~0698 5148 14~~	1	SEAL	(21/11/2018 - ...)	TT11-TSHH11
	Substituted by:	0698 5140 72 - CABLE GLAND M20 (quantity: 1)			
	0698 5141 21	1	CABLE GLAND	(21/11/2018 - ...)	M2
	0697 9809 53	1	LOCK NUT	(21/11/2018 - ...)	M2
	0698 5141 21	1	CABLE GLAND	(21/11/2018 - ...)	DRYER
	0697 9809 53	1	LOCK NUT	(21/11/2018 - ...)	DRYER
	0698 5141 17	1	CABLE GLAND	(21/11/2018 - ...)	DRYER
	0697 9809 54	1	LOCK NUT	(21/11/2018 - ...)	DRYER
	1089 9575 16	1	PHASE SEQUENCE RELAY	(21/11/2018 - ...)	K25
	2202 9691 01	1	TRANSFORMER	(21/11/2018 - ...)	T1
	2204 2167 91	1	AUTO TRANSFORMER	(21/11/2018 - ...)	T2
	1089 9168 48	1	FUSE	(21/11/2018 - ...)	F2
	1089 9594 01	1	FUSE HOLDER	(21/11/2018 - ...)	F2
	1089 9168 63	2	FUSE	(21/11/2018 - ...)	F1
	1089 9168 53	2	FUSE	(21/11/2018 - ...)	F1
	1089 9594 02	1	FUSE HOLDER	(21/11/2018 - ...)	F1
	1089 0591 31	1	FUSE	(21/11/2018 - ...)	F3
	1089 9594 01	1	FUSE HOLDER	(21/11/2018 - ...)	F3
	1089 9168 77	2	FUSE	(21/11/2018 - ...)	F5-6
	1088 1510 38	2	FUSE HOLDER	(21/11/2018 - ...)	F5-6
	1088 1510 39	2	END SECTION	(21/11/2018 - ...)	F5-6
	1089 9168 79	1	FUSE	(21/11/2018 - ...)	F4
	1088 1510 38	1	FUSE HOLDER	(21/11/2018 - ...)	F4
	1088 1510 39	1	END SECTION	(21/11/2018 - ...)	F4
	1089 9168 42	1	FUSE	(21/11/2018 - ...)	F8
	1089 9594 04	1	FUSE HOLDER	(21/11/2018 - ...)	F8
	1088 1510 13	5	TERMINAL	(21/11/2018 - ...)	2X0
	1088 1515 16	1	END PLATE	(21/11/2018 - ...)	2X0
	1089 0506 09	2	EARTH-TERMINAL	(21/11/2018 - ...)	2X0
	~~1088 0031 81~~	4	END STOP	(21/11/2018 - ...)	2X0
	Substituted by:	1089 0577 82 - END RETAINER (quantity: 1)			
	1088 1510 10	1	EARTH TERMINAL	(21/11/2018 - ...)	2X0
	1088 1510 14	1	TERMINAL	(21/11/2018 - ...)	2X0
	1088 1510 10	2	EARTH TERMINAL	(28/02/2019 - ...)	2X0
	1088 1510 14	2	TERMINAL	(28/02/2019 - ...)	2X0
	1088 0031 74	12	TERMINAL	(21/11/2018 - ...)	XM
	1088 0031 99	1	END PLATE	(21/11/2018 - ...)	XM
	1088 0031 96	6	JUMPER	(21/11/2018 - ...)	XM
	~~1088 0031 81~~	2	END STOP	(21/11/2018 - ...)	XM
	Substituted by:	1089 0577 82 - END RETAINER (quantity: 1)			
	1088 0037 81	1	CONNECTOR	(21/11/2018 - ...)	2X27
	1088 0031 32	1	CONNECTOR	(21/11/2018 - ...)	2X30
	1088 0037 31	1	CONNECTOR 3-POLE	(21/11/2018 - ...)	X109
	1089 9513 89	1	EMERGENCY STOP PUSH BUTTON	(21/11/2018 - ...)	S10
	1089 9482 98	2	NC CONTACT	(21/11/2018 - ...)	S10
	1089 9482 95	1	MODULE HOLDER	(21/11/2018 - ...)	S10
	1089 9125 13	1	DECAL	(21/11/2018 - ...)	S10

Legend:

FREQ:60HZ - Frequency:60 Hz
MODEL:CPBG20_18J - Model:CPBg 20
MODEL:CPBG34_18J - Model:CPBg 34
IDRY:Y - Integrated dryer:Yes
MODEL:CPBG25_18J - Model:CPBg 25
MOVOL:200230460V - Supply voltage:200-230-460 V
MAPPR:CRNASME - Pressure Vessel Approval:CRN (based on ASME)
MODEL:CPBG29_18J - Model:CPBg 29

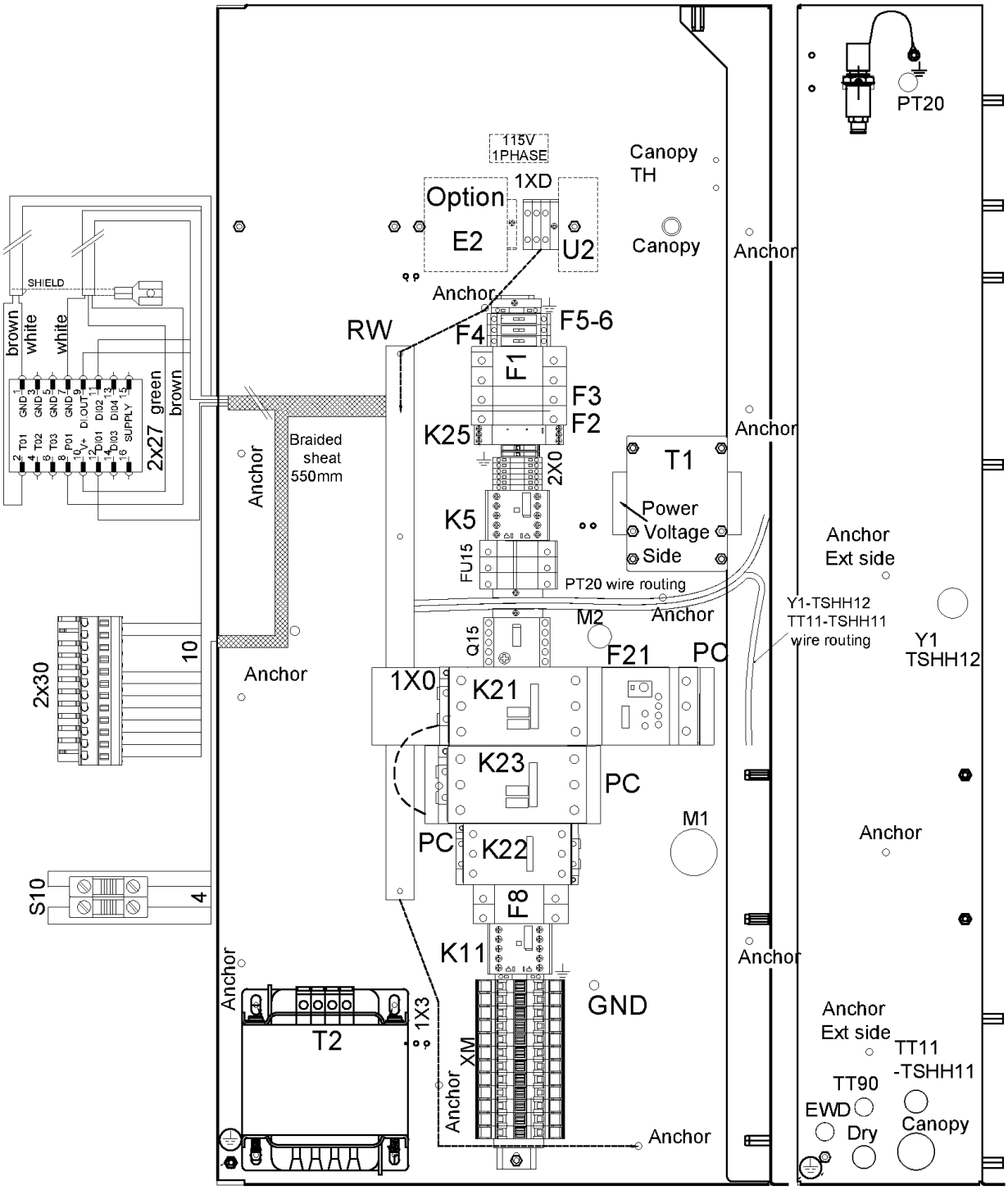
PT20
115V
1PHASE
Canopy
TH
Option
1XD
E2
U2
Canopy
Anchor
SHIELD
Anchor
RW
F4
F5-6
F1
F3
F2
K25
2X0
T1
Power
Voltage
Side
K5
FU15
Anchor
Ext side
PT20 wire routing
Y1-TSHH12
TT11-TSHH11
wire routing
Y1
TSHH12
M2
Anchor
Q15
F21
PC
brown
white
white
green
brown
2x27
Braided
sheat
550mm
Anchor
1X0
K21
2x30
10
Anchor
K23
PC
M1
Anchor
PC
K22
S10
4
F8
K11
Anchor
Anchor
GND
T2
1X3
XM
Anchor
Anchor
Ext side
TT11
-TSHH11
TT90
EWD
Dry
Canopy
Anchor

39 - Cubicle components CPBg 20-34 - 200230460V - CRNSASME - With dryer - Gear driven

(MODEL:CPBG20_18J , MODEL:CPBG25_18J , MODEL:CPBG29_18J , MODEL:CPBG34_18J) + FREQ:60HZ + IDRY:Y + MAPPR:CRNASME + MOVOL:200230460V

Ref	Part Number	Qty	Name	Validity	EL
	1088 0153 03	1	CONNECTION HEAD	(21/11/2018 - ...)	XY1
	1088 0021 92	1	CONNECTOR	(21/11/2018 - ...)	XTT11-TSHH1
	1088 0021 93	4	TERMINAL PIN	(21/11/2018 - ...)	XTT11-TSHH1
	2204 1039 00	1	PRESSURE SENSOR	(21/11/2018 - ...)	PT20
	1088 0021 59	1	CONNECTOR FEMALE	(21/11/2018 - ...)	PT20
	1088 0021 60	3	WIRE SEAL	(21/11/2018 - ...)	PT20
	1088 0021 61	3	TERMINAL PIN	(21/11/2018 - ...)	PT20
	2204 1407 00	1	STRAIGHT FITTING	(21/11/2018 - ...)	PT20
	0348 0110 03	1	ANCHOR PLATE	(21/11/2018 - ...)	PT20
	0348 0101 13	1	CABLE TIE	(21/11/2018 - ...)	PT20
	6236 3126 00	9	ANCHOR	(21/11/2018 - ...)	
	2204 1487 00	1	CUBICLE BOX	(21/11/2018 - ...)	
	2205 0325 09	2	SERVICE DIAGRAM	(28/02/2019 - ...)	
	2205 0325 20	2	ELECTRICAL LIST	(21/11/2018 - ...)	
	2200 7723 35	1	GLOSSARY ELECTRICAL PARTS	(21/11/2018 - ...)	
	2204 2198 01	1	LABEL	(21/11/2018 - ...)	
	2204 2198 11	1	LABEL	(21/11/2018 - ...)	
	2204 2198 21	1	LABEL	(21/11/2018 - ...)	
	2202 8788 01	1	LABEL	(21/11/2018 - ...)	
	2202 2610 04	1	LABEL	(21/11/2018 - ...)	
	2202 2610 70	1	LABEL	(21/11/2018 - ...)	
	2203 0541 10	1	LABEL	(21/11/2018 - ...)	
	2204 2155 04	1	LABEL	(21/11/2018 - ...)	
	2202 2610 01	1	LABEL	(21/11/2018 - ...)	

Legend:

FREQ:60HZ - Frequency:60 Hz
MODEL:CPBG20_18J - Model:CPBg 20
MODEL:CPBG34_18J - Model:CPBg 34
IDRY:Y - Integrated dryer:Yes
MODEL:CPBG25_18J - Model:CPBg 25
MOVOL:200230460V - Supply voltage:200-230-460 V
MAPPR:CRNASME - Pressure Vessel Approval:CRN (based on ASME)
MODEL:CPBG29_18J - Model:CPBg 29

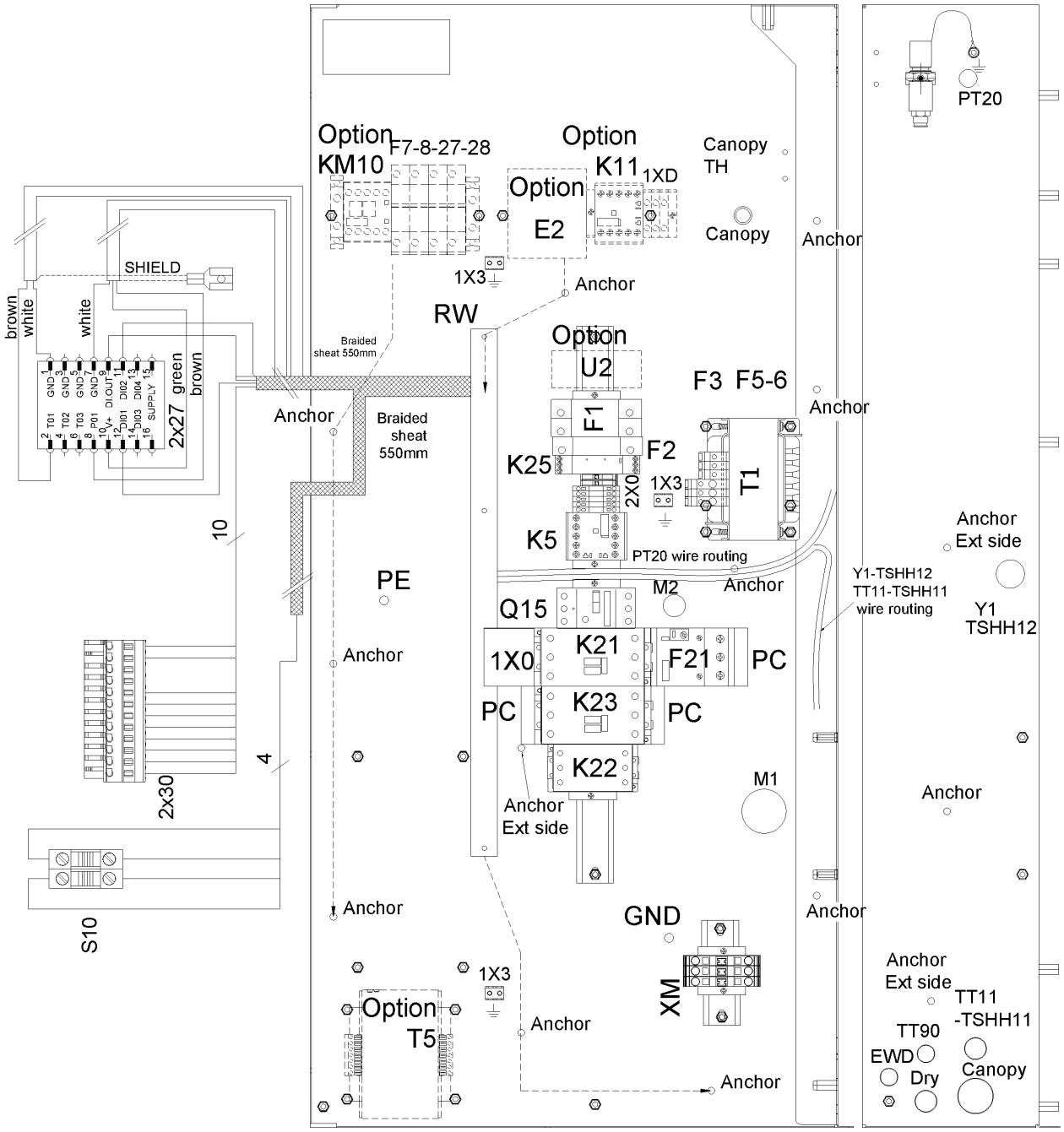
PT20
Option
KM10
F7-8-27-28
Option
K11
1XD
Option
E2
Canopy
TH
Canopy
Anchor
SHIELD
1X3
Anchor
RW
brown
white
white
Braided
sheat 550mm
Option
U2
F3 F5-6
Anchor
green
brown
2x27
Anchor
Braided
sheat
550mm
F1
F2
K25
2X0
1X3
T1
10
K5
PT20 wire routing
Anchor
Ext side
PE
M2
Anchor
Y1-TSHH12
TT11-TSHH11
wire routing
Y1
TSHH12
Q15
K21
1X0
F21
PC
Anchor
PC
K23
PC
4
K22
M1
2x30
Anchor
Ext side
Anchor
S10
Anchor
GND
Anchor
1X3
XM
Anchor
Ext side
Option
T5
Anchor
TT11
-TSHH11
TT90
EWD
Dry
Canopy
Anchor

Ref	Part Number	Qty	Name	Validity	EL
	2205 0137 15	1	CUBICLE	**(21/11/2018 - ...)** MODEL:CPBG20_18J + MOVOL:380V	
	2205 0137 16	1	CUBICLE	**(21/11/2018 - ...)** MODEL:CPBG25_18J + MOVOL:380V	
	2205 0137 17	1	CUBICLE	**(21/11/2018 - ...)** MODEL:CPBG29_18J + MOVOL:380V	
	2205 0137 18	1	CUBICLE	**(21/11/2018 - ...)** MODEL:CPBG34_18J + MOVOL:380V	
	2205 0137 11	1	CUBICLE	**(21/11/2018 - ...)** MODEL:CPBG20_18J + MOVOL:440V	
	2205 0137 12	1	CUBICLE	**(21/11/2018 - ...)** MODEL:CPBG25_18J + MOVOL:440V	
	2205 0137 13	1	CUBICLE	**(21/11/2018 - ...)** MODEL:CPBG29_18J + MOVOL:440V	
	2205 0137 14	1	CUBICLE	**(21/11/2018 - ...)** MODEL:CPBG34_18J + MOVOL:440V	
	1089 9267 96	1	SUPPLY BLOCK	**(21/11/2018 - ...)** MODEL:CPBG34_18J + MOVOL:380V	1X0
	1089 9267 86	1	TERMINAL	**(21/11/2018 - ...)** (MODEL:CPBG20_18J , MODEL:CPBG25_18J , MODEL:CPBG29_18J) + (MOVOL:380V , MOVOL:440V) , MODEL:CPBG34_18J + MOVOL:440V	1X0
	1089 9438 75	1	CONTACTOR	**(21/11/2018 - ...)** (MODEL:CPBG25_18J , MODEL:CPBG29_18J) + (MOVOL:380V , MOVOL:440V) , MODEL:CPBG34_18J + MOVOL:440V	K21
	1089 9438 73	1	CONTACTOR	**(21/11/2018 - ...)** MODEL:CPBG20_18J	K21
	1089 9496 92	1	CONTACTOR	**(21/11/2018 - ...)** MODEL:CPBG34_18J + MOVOL:380V	K21
	1089 9496 92	1	CONTACTOR	**(21/11/2018 - ...)** MODEL:CPBG34_18J + MOVOL:380V	K23
	1089 9438 73	1	CONTACTOR	**(21/11/2018 - ...)** MODEL:CPBG20_18J	K23
	1089 9438 75	1	CONTACTOR	**(21/11/2018 - ...)** (MODEL:CPBG25_18J , MODEL:CPBG29_18J) + (MOVOL:380V , MOVOL:440V) , MODEL:CPBG34_18J + MOVOL:440V	K23
	1089 9216 15	3	COVER	**(21/11/2018 - ...)** MODEL:CPBG34_18J + MOVOL:380V	PC
	1089 9438 70	1	CONTACTOR	**(21/11/2018 - ...)** (MODEL:CPBG25_18J , MODEL:CPBG29_18J) + MOVOL:380V , (MODEL:CPBG29_18J , MODEL:CPBG34_18J) + MOVOL:440V	K22
	1089 9438 67	1	CONTACTOR	**(21/11/2018 - ...)** (MOVOL:380V , MOVOL:440V) + MODEL:CPBG20_18J , MODEL:CPBG25_18J + MOVOL:440V	K22
	1089 9438 73	1	CONTACTOR	**(21/11/2018 - ...)** MODEL:CPBG34_18J + MOVOL:380V	K22
	1089 9446 93	1	OVERLOAD RELAY	**(21/11/2018 - ...)** MODEL:CPBG29_18J + MOVOL:380V	F21
	1089 9205 83	1	OVERLOAD RELAY	**(21/11/2018 - ...)** MODEL:CPBG34_18J + MOVOL:380V	F21
	1089 9446 94	1	OVERLOAD RELAY	**(21/11/2018 - ...)** MODEL:CPBG34_18J + MOVOL:440V	F21
	1089 9446 92	1	OVERLOAD RELAY	**(21/11/2018 - ...)** MODEL:CPBG25_18J + MOVOL:380V , MODEL:CPBG29_18J + MOVOL:440V	F21
	1089 9446 90	1	OVERLOAD RELAY	**(21/11/2018 - ...)** MODEL:CPBG20_18J + MOVOL:440V	F21
	1089 9446 91	1	OVERLOAD RELAY	**(21/11/2018 - ...)** MODEL:CPBG20_18J + MOVOL:380V , MODEL:CPBG25_18J + MOVOL:440V	F21
	1089 9267 21	1	CIRCUIT BREAKER	**(21/11/2018 - ...)** MODEL:CPBG20_18J	Q15
	1089 9267 27	1	CIRCUIT BREAKER	**(21/11/2018 - ...)** MODEL:CPBG34_18J	Q15
	1089 9267 23	1	CIRCUIT BREAKER	**(21/11/2018 - ...)** MODEL:CPBG25_18J , MODEL:CPBG29_18J	Q15
	1089 9267 56	1	AUX CONTACT	**(21/11/2018 - ...)**	Q15
	1088 0031 71	3	TERMINAL	**(21/11/2018 - ...)** MOVOL:440V	XM
	1088 0039 39	1	END PLATE	**(21/11/2018 - ...)** MOVOL:440V	XM
	~~1088 0031 81~~	2	END STOP	**(21/11/2018 - ...)** MOVOL:440V	XM

Legend:

FREQ:60HZ - Frequency:60 Hz
MODEL:CPBG25_18J - Model:CPBg 25
MOVOL:380V - Supply voltage:380 V
MAPPR:ASME - Pressure Vessel Approval:ASME (U Stamp)
MODEL:CPBG29_18J - Model:CPBg 29
MOVOL:440V - Supply voltage:440 V
MODEL:CPBG20_18J - Model:CPBg 20
MODEL:CPBG34_18J - Model:CPBg 34

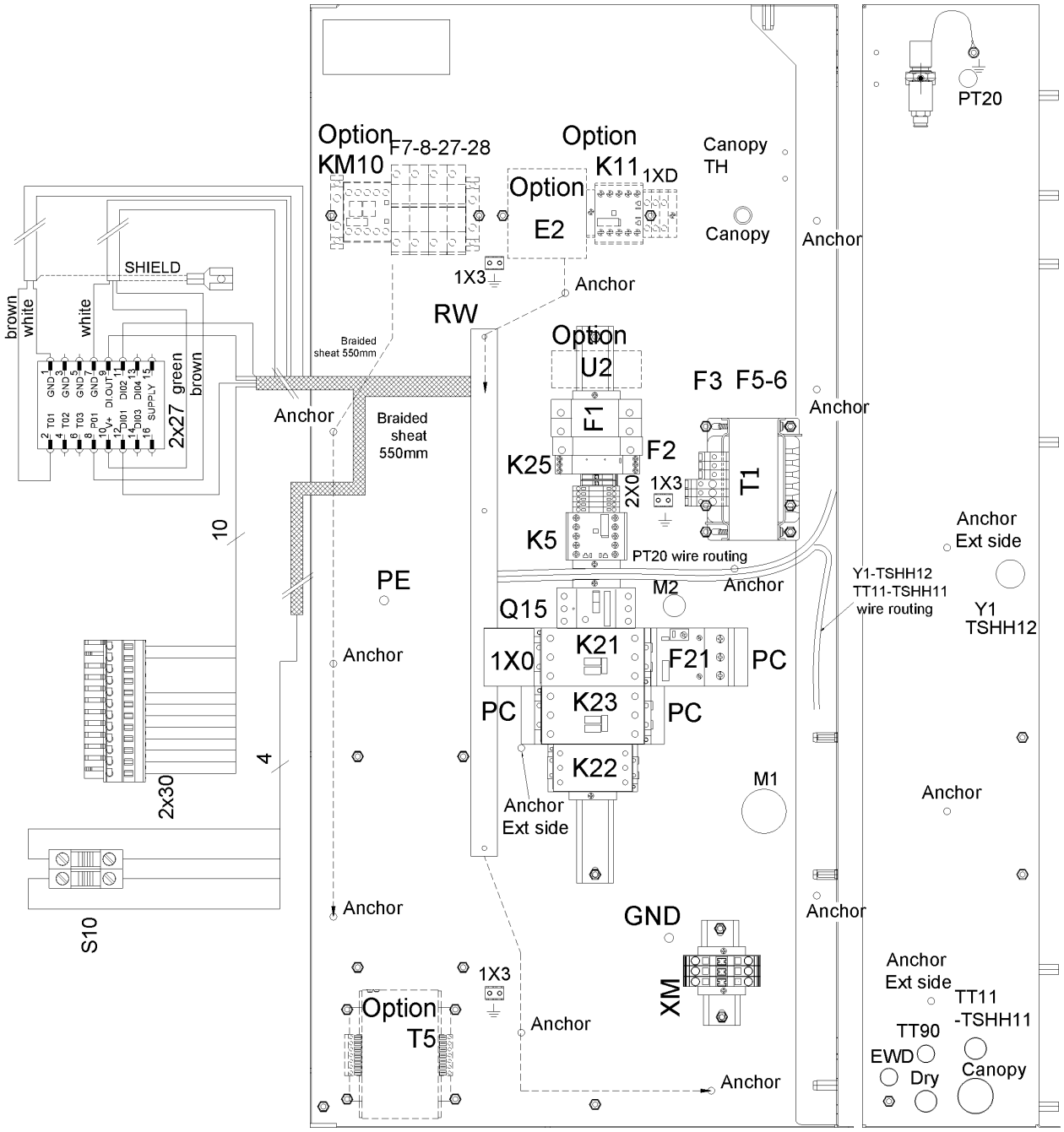
PT20
Option
KM10
F7-8-27-28
Option
K11
1XD
Option
E2
Canopy
TH
Canopy
Anchor
SHIELD
1X3
Anchor
RW
Option
U2
F3 F5-6
Anchor
brown
white
white
green
brown
2x27
Braided
sheat 550mm
Anchor
Braided
sheat
550mm
F1
F2
K25
2X0
1X3
T1
K5
PT20 wire routing
Anchor
Ext side
10
PE
M2
Anchor
Y1-TSHH12
TT11-TSHH11
wire routing
Y1
TSHH12
Q15
K21
1X0
F21
PC
Anchor
PC
K23
PC
K22
M1
Anchor
Ext side
Anchor
4
2x30
S10
Anchor
GND
Anchor
1X3
XM
Anchor
Ext side
TT11
-TSHH11
Option
T5
Anchor
TT90
EWD
Dry
Canopy
Anchor

Ref	Part Number	Qty	Name	Validity	EL
	Substituted by:	1089 0577 82 - END RETAINER (quantity: 1)			
	1089 9421 85	1	AUX RELAY	(21/11/2018 - ...)	K5
	0698 5140 76	1	CABLE GLAND	(21/11/2018 - ...)	
	0697 9809 25	1	LOCK NUT	(21/11/2018 - ...)	
	0698 5141 17	1	CABLE GLAND	(21/11/2018 - ...)	
	0698 5148 72	1	SEAL	(21/11/2018 - ...)	
	0697 9809 54	1	LOCK NUT	(21/11/2018 - ...)	
	0698 5141 07	1	CABLE GLAND	(21/11/2018 - ...)	
	0697 9809 59	1	LOCK NUT	(21/11/2018 - ...)	
	0698 5141 21	1	CABLE GLAND	(21/11/2018 - ...)	
	~~0698 5148 14~~	1	SEAL	(21/11/2018 - ...)	
	Substituted by:	0698 5140 72 - CABLE GLAND M20 (quantity: 1)			
	0697 9809 53	1	LOCK NUT	(21/11/2018 - ...)	
	0698 5141 21	1	CABLE GLAND	(21/11/2018 - ...)	
	0697 9809 53	1	LOCK NUT	(21/11/2018 - ...)	
	1089 9575 16	1	PHASE SEQUENCE RELAY	(21/11/2018 - ...)	K25
	2202 9105 01	1	TRANSFORMER	(21/11/2018 - ...)	T1
	1089 0612 22	1	FUSE	(21/11/2018 - ...)	F2
	1089 9594 01	1	FUSE HOLDER	(21/11/2018 - ...)	F2
	1089 0612 25	2	FUSE	(21/11/2018 - ...)	F1
	1089 9594 02	1	FUSE HOLDER	(21/11/2018 - ...)	F1
	1088 1510 13	5	TERMINAL	(21/11/2018 - ...)	2X0
	1088 1515 16	1	END PLATE	(21/11/2018 - ...)	2X0
	1089 0506 09	2	EARTH-TERMINAL	(21/11/2018 - ...)	2X0
	~~1088 0031 81~~	4	END STOP	(21/11/2018 - ...)	2X0
	Substituted by:	1089 0577 82 - END RETAINER (quantity: 1)			
	0694 5900 05	3	TAB	(21/11/2018 - ...)	1X3
	1088 0037 81	1	CONNECTOR	(21/11/2018 - ...)	2X27
	1088 0031 32	1	CONNECTOR	(21/11/2018 - ...)	2X30
	1088 0037 31	1	CONNECTOR 3-POLE	(21/11/2018 - ...)	X109
	1089 9513 89	1	EMERGENCY STOP PUSH BUTTON	(21/11/2018 - ...)	S10
	1089 9482 98	2	NC CONTACT	(21/11/2018 - ...)	S10
	1089 9482 95	1	MODULE HOLDER	(21/11/2018 - ...)	S10
	1089 9125 13	1	DECAL	(21/11/2018 - ...)	S10
	1088 0153 03	1	CONNECTION HEAD	(21/11/2018 - ...)	XY1
	1088 0021 92	1	CONNECTOR	(21/11/2018 - ...)	XTT11-TSHH1
	1088 0021 93	4	TERMINAL PIN	(21/11/2018 - ...)	XTT11-TSHH1
	2204 1039 00	1	PRESSURE SENSOR	(21/11/2018 - ...)	PT20
	1088 0021 59	1	CONNECTOR FEMALE	(21/11/2018 - ...)	PT20
	1088 0021 60	3	WIRE SEAL	(21/11/2018 - ...)	PT20
	1088 0021 61	3	TERMINAL PIN	(21/11/2018 - ...)	PT20
	2204 1407 00	1	STRAIGHT FITTING	(21/11/2018 - ...)	PT20
	0348 0110 03	1	ANCHOR PLATE	(21/11/2018 - ...)	PT20
	0348 0101 13	1	CABLE TIE	(21/11/2018 - ...)	PT20
	6236 3126 00	9	ANCHOR	(21/11/2018 - ...)	
	2204 1487 00	1	CUBICLE BOX	(21/11/2018 - ...)	
	2205 0137 00	2	SERVICE DIAGRAM	(21/11/2018 - ...)	
	2205 0137 20	2	ELECTRICAL LIST	(21/11/2018 - ...)	
	2200 7723 35	1	GLOSSARY ELECTRICAL PARTS	(21/11/2018 - ...)	
	2204 1227 51	1	SINGLE LINE LABEL	(21/11/2018 - ...)	

Legend:

FREQ:60HZ - Frequency:60 Hz
MODEL:CPBG25_18J - Model:CPBg 25
MOVOL:380V - Supply voltage:380 V
MAPPR:ASME - Pressure Vessel Approval:ASME (U Stamp)
MODEL:CPBG29_18J - Model:CPBg 29
MOVOL:440V - Supply voltage:440 V
MODEL:CPBG20_18J - Model:CPBg 20
MODEL:CPBG34_18J - Model:CPBg 34

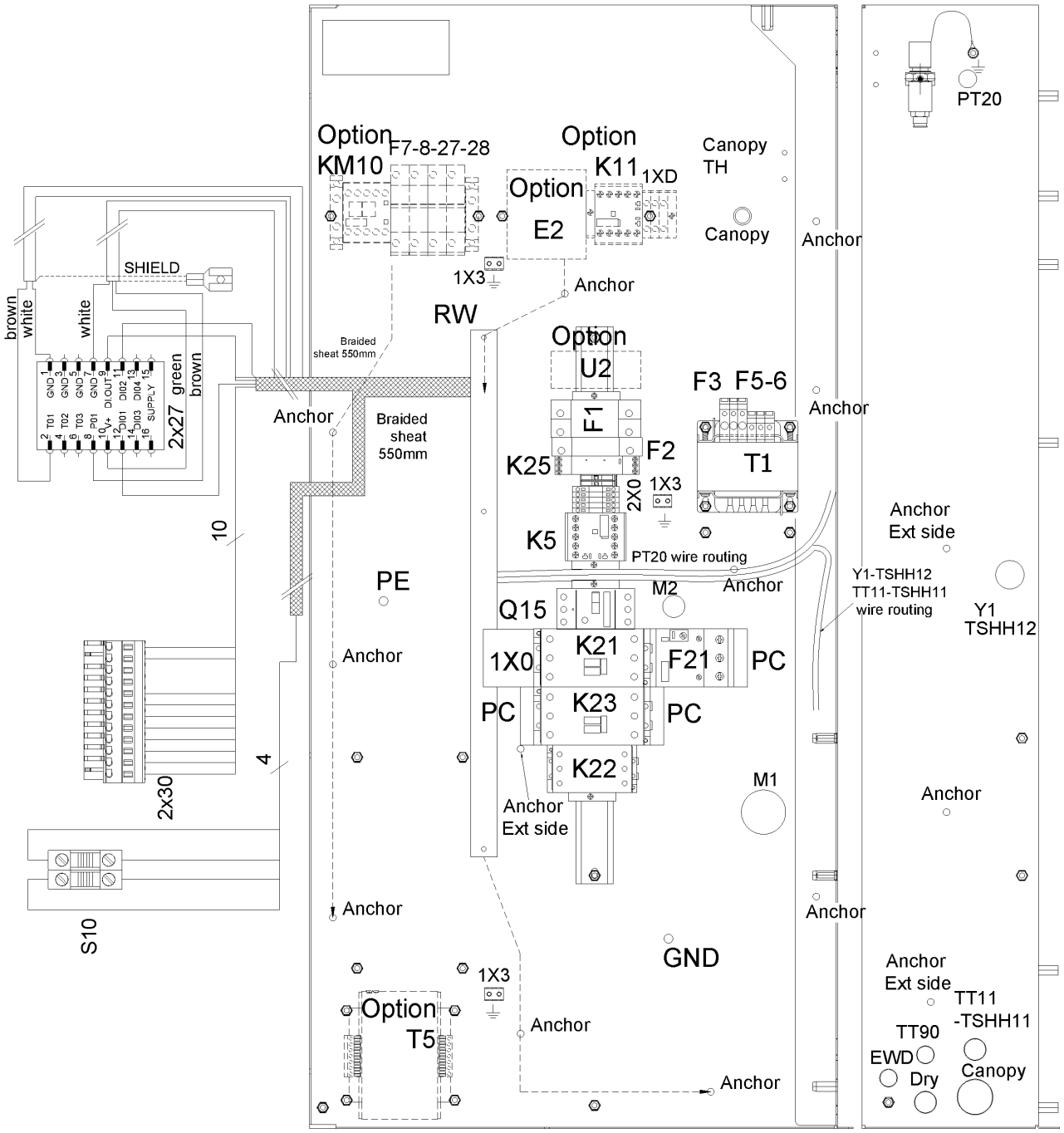
Option
KM10
F7-8-27-28
Option
K11
1XD
Option
E2
Canopy
TH
Canopy
Anchor
PT20
SHIELD
brown
white
white
green
brown
2x27
1X3
Anchor
RW
Braided
sheat 550mm
Option
U2
F3 F5-6
Anchor
Anchor
Braided
sheat
550mm
F1
F2
K25
T1
2X0
1X3
K5
PT20 wire routing
Anchor
Ext side
10
PE
M2
Anchor
Y1-TSHH12
TT11-TSHH11
wire routing
Y1
TSHH12
Q15
K21
1X0
F21
PC
Anchor
PC
K23
PC
4
K22
M1
Anchor
2x30
Anchor
Ext side
Anchor
Anchor
S10
GND
Anchor
Ext side
1X3
Option
T5
Anchor
TT11
-TSHH11
TT90
EWD
Dry
Canopy
Anchor

Ref	Part Number	Qty	Name	Validity	EL
	2205 0137 01	1	CUBICLE	**(21/08/2018 - ...)** MODEL:CPBG20_18J	
	2205 0137 02	1	CUBICLE	**(21/08/2018 - ...)** MODEL:CPBG25_18J	
	2205 0137 03	1	CUBICLE	**(21/08/2018 - ...)** MODEL:CPBG29_18J	
	2205 0137 04	1	CONTACTOR	**(21/08/2018 - ...)** MODEL:CPBG34_18J	
	1089 9267 96	1	SUPPLY BLOCK	**(21/08/2018 - ...)** MODEL:CPBG34_18J	1X0
	1089 9267 86	1	TERMINAL	**(21/08/2018 - ...)** MODEL:CPBG20_18J , MODEL:CPBG25_18J , MODEL:CPBG29_18J	1X0
	1089 9438 73	1	CONTACTOR	**(21/08/2018 - ...)** MODEL:CPBG20_18J	K21
	1089 9496 92	1	CONTACTOR	**(21/08/2018 - ...)** MODEL:CPBG34_18J	K21
	1089 9438 75	1	CONTACTOR	**(21/08/2018 - ...)** MODEL:CPBG25_18J , MODEL:CPBG29_18J	K21
	1089 9438 75	1	CONTACTOR	**(21/08/2018 - ...)** MODEL:CPBG25_18J , MODEL:CPBG29_18J	K23
	1089 9438 73	1	CONTACTOR	**(21/08/2018 - ...)** MODEL:CPBG20_18J	K23
	1089 9496 92	1	CONTACTOR	**(21/08/2018 - ...)** MODEL:CPBG34_18J	K23
	1089 9216 15	3	COVER	**(21/08/2018 - ...)** MODEL:CPBG34_18J	PC
	1089 9438 67	1	CONTACTOR	**(21/08/2018 - ...)** MODEL:CPBG20_18J	K22
	1089 9438 70	1	CONTACTOR	**(21/08/2018 - ...)** MODEL:CPBG25_18J , MODEL:CPBG29_18J	K22
	1089 9438 73	1	CONTACTOR	**(21/08/2018 - ...)** MODEL:CPBG34_18J	K22
	1089 9446 90	1	OVERLOAD RELAY	**(21/08/2018 - ...)** MODEL:CPBG20_18J	F21
	1089 9446 93	1	OVERLOAD RELAY	**(21/08/2018 - ...)** MODEL:CPBG29_18J	F21
	1089 9446 92	1	OVERLOAD RELAY	**(21/08/2018 - ...)** MODEL:CPBG25_18J	F21
	1089 9205 82	1	OVERLOAD RELAY	**(21/08/2018 - ...)** MODEL:CPBG34_18J	F21
	1089 9267 23	1	CIRCUIT BREAKER	**(21/08/2018 - ...)** MODEL:CPBG25_18J	Q15
	1089 9267 21	1	CIRCUIT BREAKER	**(21/08/2018 - ...)** MODEL:CPBG20_18J	Q15
	1089 9267 26	1	CIRCUIT BREAKER	**(21/08/2018 - ...)** MODEL:CPBG29_18J , MODEL:CPBG34_18J	Q15
	1089 9267 56	1	AUX CONTACT	**(21/08/2018 - ...)**	Q15
	1089 9421 85	1	AUX RELAY	**(21/08/2018 - ...)**	K5
	0698 5140 76	1	CABLE GLAND	**(21/08/2018 - ...)**	
	0697 9809 25	1	LOCK NUT	**(21/08/2018 - ...)**	
	0698 5141 17	1	CABLE GLAND	**(21/08/2018 - ...)**	Y1-TSHH12
	0698 5148 72	1	SEAL	**(21/08/2018 - ...)**	Y1-TSHH12
	0697 9809 54	1	LOCK NUT	**(21/08/2018 - ...)**	Y1-TSHH12
	0698 5141 07	1	CABLE GLAND	**(21/08/2018 - ...)**	PT20
	0697 9809 59	1	LOCK NUT	**(21/08/2018 - ...)**	PT20
	0698 5141 21	1	CABLE GLAND	**(21/08/2018 - ...)**	CG5
	~~0698 5148 14~~	1	SEAL	**(21/08/2018 - ...)**	TT11-TSHH11
	Substituted by:	0698 5140 72 - CABLE GLAND M20 (quantity: 1)			
	0697 9809 53	1	LOCK NUT	**(21/08/2018 - ...)**	CG5
	0698 5141 21	1	CABLE GLAND	**(21/08/2018 - ...)**	TT11-TSHH11
	0697 9809 53	1	LOCK NUT	**(21/08/2018 - ...)**	TT11-TSHH11
	1089 9575 16	1	PHASE SEQUENCE RELAY	**(21/08/2018 - ...)**	K25
	2202 9106 01	1	TRANSFORMER	**(21/08/2018 - ...)**	T1
	1089 0612 22	1	FUSE	**(21/08/2018 - ...)**	F2
	1089 9594 01	1	FUSE HOLDER	**(21/08/2018 - ...)**	F2
	1089 0612 23	2	FUSE	**(21/08/2018 - ...)**	F1
	1089 9594 02	1	FUSE HOLDER	**(21/08/2018 - ...)**	F1
	~~1089 9037 48~~	1	FUSE	**(21/08/2018 - ...)**	F3
	Substituted by:	1089 9037 04 - FUSE 6.3A T 5X20 (quantity: 1)			
	1089 9037 42	1	FUSE	**(21/08/2018 - ...)**	F5-6

Legend:

FREQ:50HZ - Frequency:50 Hz
MAPPR:AS1210 - Pressure Vessel Approval:AS1210
MAPPR:CE - Pressure Vessel Approval:CE
MAPPR:MOM - Pressure Vessel Approval:MOM
MAPPR:SA - Pressure Vessel Approval:SA
MODEL:CPBG20_18J - Model:CPBg 20
MODEL:CPBG25_18J - Model:CPBg 25
MODEL:CPBG29_18J - Model:CPBg 29
MODEL:CPBG34_18J - Model:CPBg 34
MOVOL:400V - Supply voltage:400 V

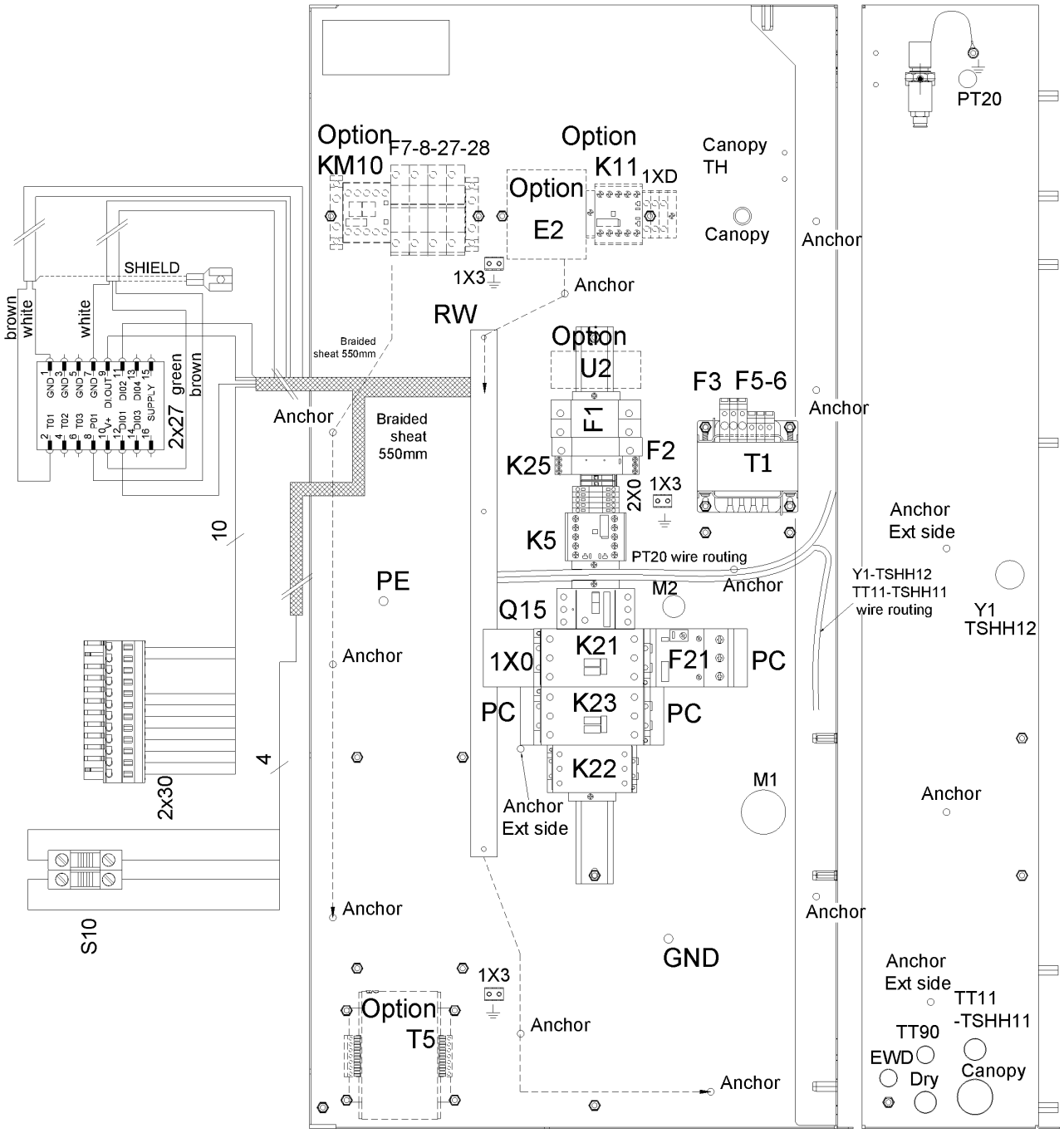
Option
KM10
F7-8-27-28
Option
K11
1XD
Option
E2
Canopy
TH
Canopy
Anchor
PT20
SHIELD
brown
white
white
green
brown
2x27
1X3
Anchor
RW
Braided
sheat 550mm
Option
U2
F3 F5-6
Anchor
Anchor
Braided
sheat
550mm
F1
F2
K25
T1
2X0
1X3
K5
PT20 wire routing
Anchor
Ext side
10
PE
M2
Anchor
Y1-TSHH12
TT11-TSHH11
wire routing
Y1
TSHH12
Q15
K21
1X0
F21
PC
Anchor
PC
K23
PC
4
K22
M1
2x30
Anchor
Ext side
Anchor
Anchor
Anchor
S10
GND
Anchor
Ext side
1X3
Option
T5
Anchor
TT11
-TSHH11
TT90
EWD
Dry
Canopy
Anchor

Ref	Part Number	Qty	Name	Validity	EL
	1088 1510 13	5	TERMINAL	(21/08/2018 - ...)	2X0
	1088 1515 16	1	END PLATE	(21/08/2018 - ...)	2X0
	1089 0506 09	2	EARTH-TERMINAL	(21/08/2018 - ...)	2X0
	~~1088 0031 81~~	4	END STOP	(21/08/2018 - ...)	2X0
	Substituted by:	1089 0577 82 - END RETAINER (quantity: 1)			
	0694 5900 05	3	TAB	(21/08/2018 - ...)	1X3
	1088 0037 81	1	CONNECTOR	(21/08/2018 - ...)	2X27
	1088 0031 32	1	CONNECTOR	(21/08/2018 - ...)	2X30
	1088 0037 31	1	CONNECTOR 3-POLE	(21/08/2018 - ...)	X109
	1089 9513 89	1	EMERGENCY STOP PUSH BUTTON	(21/08/2018 - ...)	S10
	1089 9482 98	2	NC CONTACT	(21/08/2018 - ...)	S10
	1089 9482 95	1	MODULE HOLDER	(21/08/2018 - ...)	S10
	1089 9125 13	1	DECAL	(21/08/2018 - ...)	S10
	1088 0153 03	1	CONNECTION HEAD	(21/08/2018 - ...)	XY1
	1088 0021 92	1	CONNECTOR	(21/08/2018 - ...)	XTT11-TSHH1
	1088 0021 93	4	TERMINAL PIN	(21/08/2018 - ...)	XTT11-TSHH1
	2204 1039 00	1	PRESSURE SENSOR	(21/08/2018 - ...)	PT20
	1088 0021 59	1	CONNECTOR FEMALE	(21/08/2018 - ...)	PT20
	1088 0021 60	3	WIRE SEAL	(21/08/2018 - ...)	PT20
	1088 0021 61	3	TERMINAL PIN	(21/08/2018 - ...)	PT20
	2204 1407 00	1	STRAIGHT FITTING	(21/08/2018 - ...)	PT20
	0348 0110 03	1	ANCHOR PLATE	(21/08/2018 - ...)	PT20
	0348 0101 13	1	CABLE TIE	(21/08/2018 - ...)	PT20
	6236 3126 00	9	ANCHOR	(21/08/2018 - ...)	PT20
	2204 1487 00	1	CUBICLE BOX	(21/08/2018 - ...)	
	2205 0137 00	2	SERVICE DIAGRAM	(21/08/2018 - ...)	
	2205 0137 10	2	ELECTRICAL LIST	(21/08/2018 - ...)	
	2200 7723 35	1	GLOSSARY ELECTRICAL PARTS	(21/08/2018 - ...)	
	2204 1227 51	1	SINGLE LINE LABEL	(21/08/2018 - ...)	

Legend:

FREQ:50HZ - Frequency:50 Hz
MAPPR:AS1210 - Pressure Vessel Approval:AS1210
MAPPR:CE - Pressure Vessel Approval:CE
MAPPR:MOM - Pressure Vessel Approval:MOM
MAPPR:SA - Pressure Vessel Approval:SA
MODEL:CPBG20_18J - Model:CPBg 20
MODEL:CPBG25_18J - Model:CPBg 25
MODEL:CPBG29_18J - Model:CPBg 29
MODEL:CPBG34_18J - Model:CPBg 34
MOVOL:400V - Supply voltage:400 V

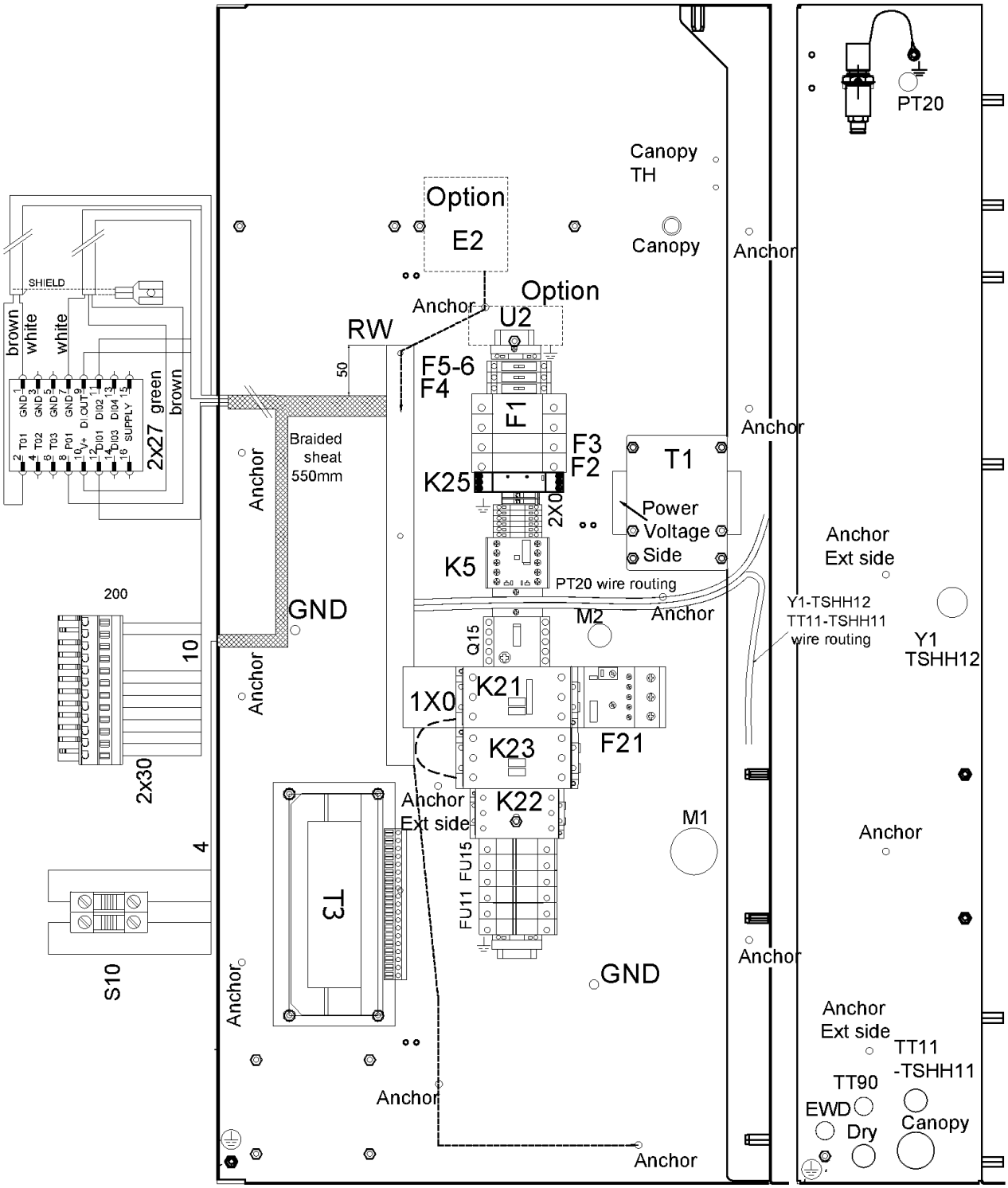
PT20
Canopy
TH
Option
E2
Canopy
Anchor
Option
U2
Anchor
RW
50
F5-6
F4
F1
F3
F2
T1
K25
2X0
Power
Voltage
Side
K5
PT20 wire routing
Anchor
Ext side
Y1-TSHH12
TT11-TSHH11
wire routing
Y1
TSHH12
M2
Q15
K21
1X0
K23
F21
K22
Anchor
Ext side
M1
FU11 FU15
GND
T3
S10
2x30
200
10
4
2x27
brown
white
white
green
brown
SHIELD
Braided
sheat
550mm
Anchor
TT11
-TSHH11
TT90
EWD
Dry
Canopy

Ref	Part Number	Qty	Name	Validity	EL
	2205 0325 51	1	CUBICLE	(21/11/2018 - ...) MODEL:CPBG20_18J	
	2205 0325 52	1	CUBICLE	(21/11/2018 - ...) MODEL:CPBG25_18J	
	2205 0325 53	1	CUBICLE	(21/11/2018 - ...) MODEL:CPBG29_18J	
	2205 0325 54	1	CUBICLE	(21/11/2018 - ...) MODEL:CPBG34_18J	
	1089 9267 61	1	TERMINAL	(21/11/2018 - ...)	1X0
	1089 9438 70	1	CONTACTOR	(21/11/2018 - ...) MODEL:CPBG20_18J , MODEL:CPBG25_18J	K21
	1089 9438 75	1	CONTACTOR	(21/11/2018 - ...) MODEL:CPBG34_18J	K21
	1089 9438 73	1	CONTACTOR	(21/11/2018 - ...) MODEL:CPBG29_18J	K21
	1089 9496 92	1	CONTACTOR	(21/11/2018 - ...) MODEL:CPBG29_18J , MODEL:CPBG34_18J	K23
	1089 9438 78	1	CONTACTOR	(21/11/2018 - ...) MODEL:CPBG25_18J	K23
	1089 9438 75	1	CONTACTOR	(21/11/2018 - ...) MODEL:CPBG20_18J	K23
	1089 9216 15	2	COVER	(21/11/2018 - ...) MODEL:CPBG29_18J , MODEL:CPBG34_18J	PC
	1089 9438 70	1	CONTACTOR	(21/11/2018 - ...)	K22
	1089 9267 79	1	OVERLOAD RELAY	(21/11/2018 - ...)	F21
	1089 9267 65	1	OVERLOAD RELAY	(21/11/2018 - ...) MODEL:CPBG20_18J , MODEL:CPBG25_18J , MODEL:CPBG29_18J	F21
	1089 9267 66	1	OVERLOAD RELAY	(21/11/2018 - ...) MODEL:CPBG34_18J	F21
	0981 2200 03	1	MOUNTING KIT	(21/11/2018 - ...)	
	1089 9168 26	3	FUSE	(21/11/2018 - ...)	FU15
	1089 9594 06	1	HOLDER FUSE	(21/11/2018 - ...)	FU15
	1089 9332 39	3	FUSE	(21/11/2018 - ...) MODEL:CPBG25_18J , MODEL:CPBG29_18J	FU11
	1089 9168 27	3	FUSE	(21/11/2018 - ...) MODEL:CPBG34_18J	FU11
	1089 9168 36	3	FUSE	(21/11/2018 - ...) MODEL:CPBG20_18J	FU11
	1089 9594 06	1	HOLDER FUSE	(21/11/2018 - ...)	FU11
	1089 9421 85	1	AUX RELAY	(21/11/2018 - ...)	K5
	0698 5142 06	1	CABLE GLAND	(21/11/2018 - ...)	
	0697 9809 25	1	LOCK NUT	(21/11/2018 - ...)	
	0698 5141 17	1	CABLE GLAND	(21/11/2018 - ...)	Y1-TSHH12
	0698 5148 72	1	SEAL	(21/11/2018 - ...)	Y1-TSHH12
	0697 9809 54	1	LOCK NUT	(21/11/2018 - ...)	Y1-TSHH12
	0698 5141 07	1	CABLE GLAND	(21/11/2018 - ...)	PT20
	0697 9809 59	1	LOCK NUT	(21/11/2018 - ...)	PT20
	0698 5141 21	1	CABLE GLAND	(21/11/2018 - ...)	TT11-TSHH11
	0697 9809 53	1	LOCK NUT	(21/11/2018 - ...)	TT11-TSHH11
	~~0698 5148 14~~	1	SEAL	(21/11/2018 - ...)	TT11-TSHH11
	Substituted by:	0698 5140 72 - CABLE GLAND M20 (quantity: 1)			
	0698 5141 21	1	CABLE GLAND	(21/11/2018 - ...)	FAN
	0697 9809 53	1	LOCK NUT	(21/11/2018 - ...)	FAN
	1089 9461 07	1	PHASE SEQUENCE RELAY	(07/03/2019 - ...)	K25
	2202 9691 02	1	TRANSFORMER	(21/11/2018 - ...)	T1
	2204 1228 21	1	AUTO TRANSFORMER	(21/11/2018 - ...)	T3
	1089 9168 48	1	FUSE	(21/11/2018 - ...)	F2
	1089 9594 01	1	FUSE HOLDER	(21/11/2018 - ...)	F2
	1089 9168 63	2	FUSE	(21/11/2018 - ...)	F1
	1089 9594 02	1	FUSE HOLDER	(21/11/2018 - ...)	F1
	1089 0591 31	1	FUSE	(21/11/2018 - ...)	F3
	1089 9594 01	1	FUSE HOLDER	(21/11/2018 - ...)	F3
	1089 9168 77	2	FUSE	(21/11/2018 - ...)	F5-6

Legend:

FREQ:60HZ - Frequency:60 Hz
MODEL:CPBG20_18J - Model:CPBg 20
MODEL:CPBG34_18J - Model:CPBg 34
IDRY:N - Integrated dryer:No
MODEL:CPBG25_18J - Model:CPBg 25
MOVOL:575V - Supply voltage:575 V
MAPPR:CRNASME - Pressure Vessel Approval:CRN (based on ASME)
MODEL:CPBG29_18J - Model:CPBg 29

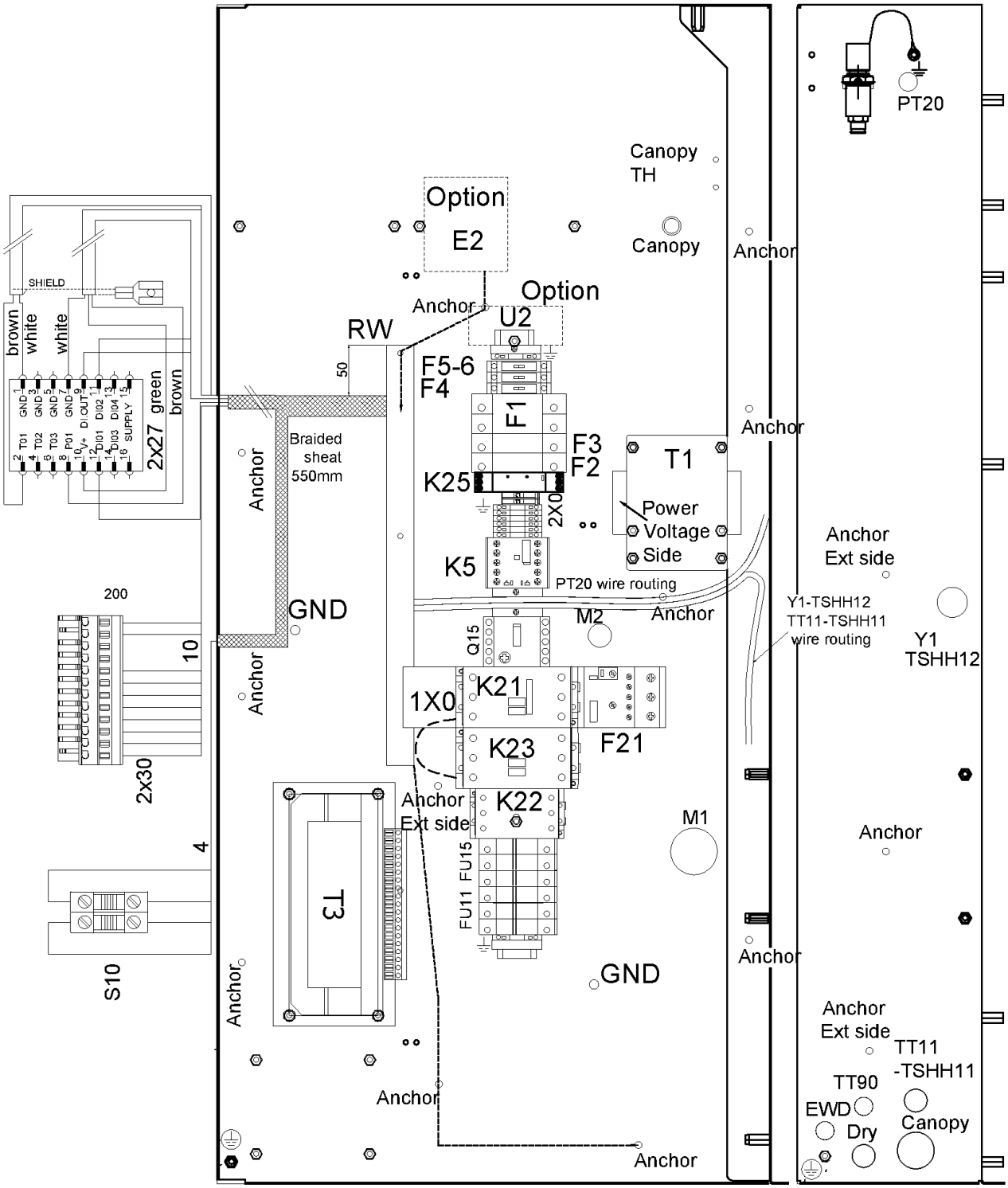
PT20
Canopy
TH
Option
E2
Canopy
Anchor
Option
U2
Anchor
RW
50
F5-6
F4
F1
F3
F2
T1
Power
Voltage
Side
K25
2X0
K5
PT20 wire routing
Anchor
Ext side
Y1-TSHH12
TT11-TSHH11
wire routing
Y1
TSHH12
Anchor
Braided
sheat
550mm
Anchor
GND
M2
Q15
K21
1X0
K23
F21
K22
Anchor
Ext side
M1
FU11 FU15
T3
GND
Anchor
Anchor
Anchor
Anchor
Ext side
TT11
-TSHH11
TT90
EWD
Dry
Canopy
Anchor
SHIELD
brown
white
white
green
brown
2x27
GND 1
GND 3
GND 5
GND 7
DI OUT 9
DI02 11
DI04 13
SUPPLY 15
TD1 2
TD2 4
TD3 6
P01 8
V+ 10
DI01 12
DI03 14
16
200
10
2x30
4
S10

Ref	Part Number	Qty	Name	Validity	EL
	1088 1510 38	2	FUSE HOLDER	(21/11/2018 - ...)	F5-6
	1088 1510 39	2	END SECTION	(21/11/2018 - ...)	F5-6
	1089 9168 79	1	FUSE	(21/11/2018 - ...)	F4
	1088 1510 38	1	FUSE HOLDER	(21/11/2018 - ...)	F4
	1088 1510 39	1	END SECTION	(21/11/2018 - ...)	F4
	1088 1510 13	5	TERMINAL	(21/11/2018 - ...)	2X0
	1088 1515 16	1	END PLATE	(21/11/2018 - ...)	2X0
	1089 0506 09	2	EARTH-TERMINAL	(21/11/2018 - ...)	2X0
	~~1088 0031 81~~	4	END STOP	(21/11/2018 - ...)	2X0
	Substituted by:	1089 0577 82 - END RETAINER (quantity: 1)			
	1088 1510 10	3	EARTH TERMINAL	(28/02/2019 - ...)	2X0
	1088 1510 14	3	TERMINAL	(28/02/2019 - ...)	2X0
	0694 5900 05	3	TAB	(21/11/2018 - 27/02/2019)	
	1088 0037 81	1	CONNECTOR	(21/11/2018 - ...)	2X27
	1088 0031 32	1	CONNECTOR	(21/11/2018 - ...)	2X30
	1088 0037 31	1	CONNECTOR 3-POLE	(21/11/2018 - ...)	X109
	1089 9513 89	1	EMERGENCY STOP PUSH BUTTON	(21/11/2018 - ...)	S10
	1089 9482 98	2	NC CONTACT	(21/11/2018 - ...)	S10
	1089 9482 95	1	MODULE HOLDER	(21/11/2018 - ...)	S10
	1089 9125 13	1	DECAL	(21/11/2018 - ...)	S10
	1088 0153 03	1	CONNECTION HEAD	(21/11/2018 - ...)	XY1
	1088 0021 92	1	CONNECTOR	(21/11/2018 - ...)	XT11-TSHH1
	1088 0021 93	4	TERMINAL PIN	(21/11/2018 - ...)	XT11-TSHH1
	2204 1039 00	1	PRESSURE SENSOR	(21/11/2018 - ...)	PT20
	1088 0021 59	1	CONNECTOR FEMALE	(21/11/2018 - ...)	PT20
	1088 0021 60	3	WIRE SEAL	(21/11/2018 - ...)	PT20
	1088 0021 61	3	TERMINAL PIN	(21/11/2018 - ...)	PT20
	2204 1407 00	1	STRAIGHT FITTING	(21/11/2018 - ...)	PT20
	0348 0110 03	1	ANCHOR PLATE	(21/11/2018 - ...)	PT20
	0348 0101 13	1	CABLE TIE	(21/11/2018 - ...)	PT20
	6236 3126 00	12	ANCHOR	(21/11/2018 - ...)	
	2204 1487 00	1	CUBICLE BOX	(21/11/2018 - ...)	
	2205 0325 09	2	SERVICE DIAGRAM	(28/02/2019 - ...)	
	2205 0325 60	2	ELECTRICAL LIST	(21/11/2018 - ...)	
	2200 7723 35	1	GLOSSARY ELECTRICAL PARTS	(21/11/2018 - ...)	
	2204 2198 12	1	LABEL	(21/11/2018 - ...)	
	2204 2198 21	1	LABEL	(21/11/2018 - ...)	
	2202 2610 02	1	LABEL	(21/11/2018 - ...)	
	2203 0541 10	1	LABEL CAUTION: ELEC. HAZARD	(21/11/2018 - ...)	
	~~1089 0362 50~~	2	SWITCH	(21/11/2018 - ...) MODEL:CPBG29_18J	
	Substituted by:	1089 9482 98 - NC CONTACT 3SU1400-1AA10-1CA0 (quantity: 1)			

Legend:

FREQ:60HZ - Frequency:60 Hz
MODEL:CPBG20_18J - Model:CPBg 20
MODEL:CPBG34_18J - Model:CPBg 34
IDRY:N - Integrated dryer:No
MODEL:CPBG25_18J - Model:CPBg 25
MOVOL:575V - Supply voltage:575 V
MAPPR:CRNASME - Pressure Vessel Approval:CRN (based on ASME)
MODEL:CPBG29_18J - Model:CPBg 29

43 - Cubicle components CPBg - 20-34 - 575V/60Hz - With dryer - Gear driven

(MODEL:CPBG20_18J , MODEL:CPBG25_18J , MODEL:CPBG29_18J , MODEL:CPBG34_18J) + FREQ:60HZ + IDRY:Y + MAPPR:CRNASME + MOVOL:575V

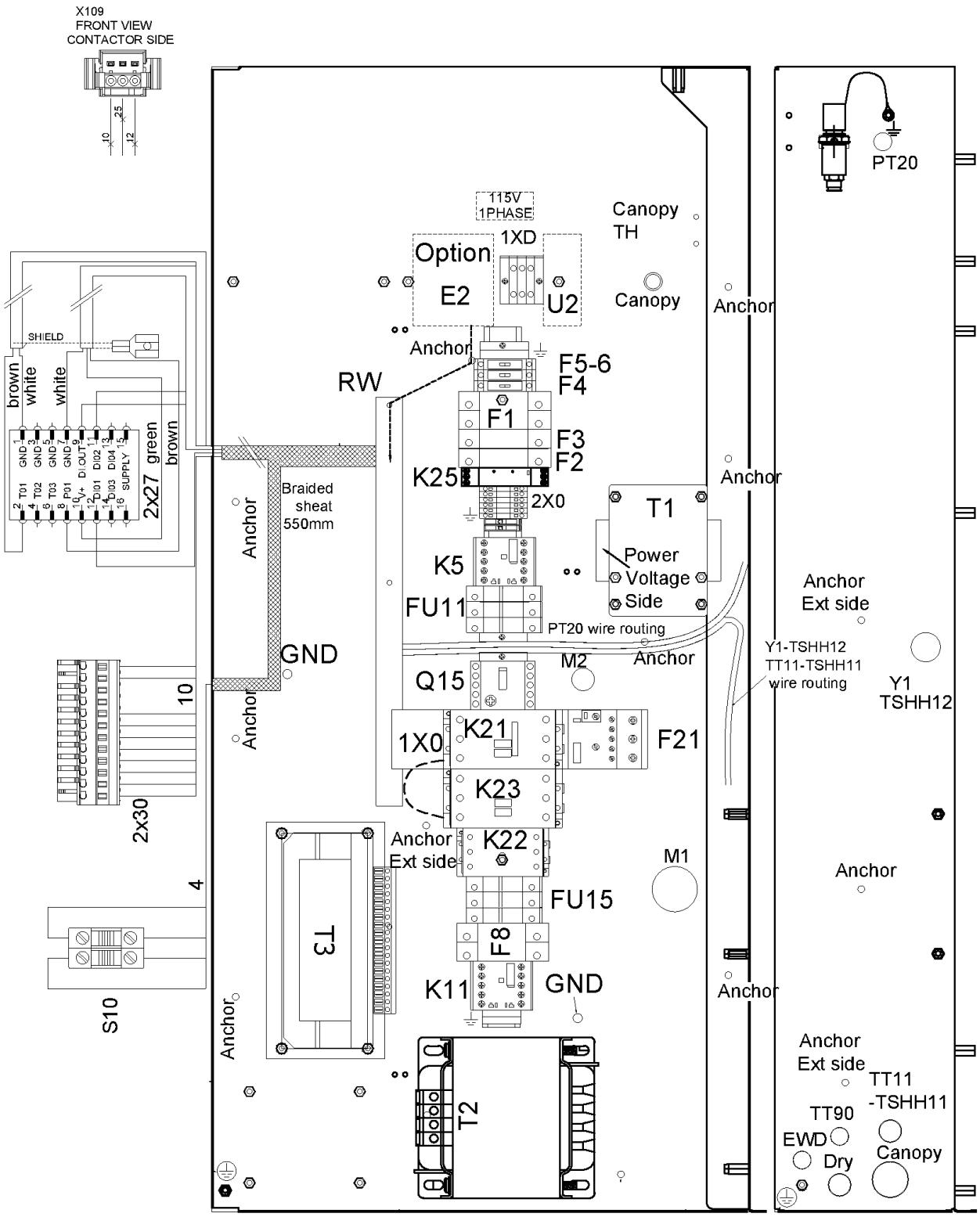

Ref	Part Number	Qty	Name	Validity	EL
	2205 0325 61	1	CUBICLE	(21/11/2018 - ...) MODEL:CPBG20_18J	
	2205 0325 62	1	CUBICLE	(21/11/2018 - ...) MODEL:CPBG25_18J	
	2205 0325 63	1	CUBICLE	(21/11/2018 - ...) MODEL:CPBG29_18J	
	2205 0325 64	1	CUBICLE	(21/11/2018 - ...) MODEL:CPBG34_18J	
	1089 9267 61	1	TERMINAL	(21/11/2018 - ...)	1X0
	1088 1510 43	2	TERMINAL	(21/11/2018 - ...)	1XD
	1088 1510 44	3	END SECTION	(21/11/2018 - ...)	
	1088 1510 19	1	TERMINAL	(21/11/2018 - ...)	
	1089 9438 73	1	CONTACTOR	(21/11/2018 - ...) MODEL:CPBG29_18J	K21
	1089 9438 70	1	LOCK NUT	(21/11/2018 - ...) MODEL:CPBG20_18J , MODEL:CPBG25_18J	K21
	1089 9438 75	1	CONTACTOR	(21/11/2018 - ...) MODEL:CPBG34_18J	K21
	1089 9438 78	1	CONTACTOR	(21/11/2018 - ...) MODEL:CPBG25_18J	K23
	1089 9438 75	1	CONTACTOR	(21/11/2018 - ...) MODEL:CPBG20_18J	K23
	1089 9496 92	1	CONTACTOR	(21/11/2018 - ...) MODEL:CPBG29_18J , MODEL:CPBG34_18J	K23
	1089 9216 15	2	COVER	(21/11/2018 - ...) MODEL:CPBG29_18J , MODEL:CPBG34_18J	PC
	1089 9438 70	1	CONTACTOR	(21/11/2018 - ...)	K22
	1089 9267 79	1	OVERLOAD RELAY	(21/11/2018 - ...)	F21
	1089 9267 65	1	OVERLOAD RELAY	(21/11/2018 - ...) MODEL:CPBG20_18J , MODEL:CPBG25_18J , MODEL:CPBG29_18J	F21
	1089 9267 66	1	OVERLOAD RELAY	(21/11/2018 - ...) MODEL:CPBG34_18J	F21
	0981 2200 03	1	MOUNTING KIT	(21/11/2018 - ...)	
	1089 9168 26	3	FUSE	(21/11/2018 - ...)	FU15
	1089 9594 06	1	FUSE HOLDER	(21/11/2018 - ...)	FU15
	1089 9168 27	3	FUSE	(21/11/2018 - ...) MODEL:CPBG34_18J	FU11
	1089 9332 39	3	FUSE	(21/11/2018 - ...) MODEL:CPBG25_18J , MODEL:CPBG29_18J	FU11
	1089 9168 36	3	FUSE	(21/11/2018 - ...) MODEL:CPBG20_18J	FU11
	1089 9594 06	1	FUSE HOLDER	(21/11/2018 - ...)	FU15
	1089 9421 85	1	AUX RELAY	(21/11/2018 - ...)	K5
	1089 9438 47	1	CONTACTOR	(21/11/2018 - ...)	K11
	0698 5142 06	1	CABLE GLAND	(21/11/2018 - ...)	
	0697 9809 25	1	LOCK NUT	(21/11/2018 - ...)	
	0698 5141 17	1	CABLE GLAND	(21/11/2018 - ...)	Y1-TSHH12
	0698 5148 72	1	SEAL	(21/11/2018 - ...)	Y1-TSHH12
	0697 9809 54	1	LOCK NUT	(21/11/2018 - ...)	Y1-TSHH12
	0698 5141 07	1	CABLE GLAND	(21/11/2018 - ...)	PT20
	0697 9809 59	1	NUT LOCK	(21/11/2018 - ...)	PT20
	0698 5141 21	1	CABLE GLAND	(21/11/2018 - ...)	TT11-TSHH11
	0697 9809 53	1	LOCK NUT	(21/11/2018 - ...)	TT11-TSHH11
	~~0698 5148 14~~	1	SEAL	(21/11/2018 - ...)	TT11-TSHH11
	Substituted by:	0698 5140 72 - CABLE GLAND M20 (quantity: 1)			
	0698 5141 21	1	CABLE GLAND	(21/11/2018 - ...)	M2
	0697 9809 53	1	LOCK NUT	(21/11/2018 - ...)	M2
	1089 9461 07	1	PHASE SEQUENCE RELAY	(07/03/2019 - ...)	K25
	2202 9691 02	1	TRANSFORMER	(21/11/2018 - ...)	T1
	2204 1228 21	1	AUTO TRANSFORMER	(21/11/2018 - ...)	T3
	2204 2167 91	1	AUTO TRANSFORMER	(21/11/2018 - ...)	T2
	1089 9168 48	1	FUSE	(21/11/2018 - ...)	F2
	1089 9594 01	1	FUSE HOLDER	(21/11/2018 - ...)	F2

Legend:

FREQ:60HZ - Frequency:60 Hz
MODEL:CPBG20_18J - Model:CPBg 20
MODEL:CPBG34_18J - Model:CPBg 34
IDRY:Y - Integrated dryer:Yes
MODEL:CPBG25_18J - Model:CPBg 25
MOVOL:575V - Supply voltage:575 V
MAPPR:CRNASME - Pressure Vessel Approval:CRN (based on ASME)
MODEL:CPBG29_18J - Model:CPBg 29

43 - Cubicle components CPBg - 20-34 - 575V/60Hz - With dryer - Gear driven

(MODEL:CPBG20_18J , MODEL:CPBG25_18J , MODEL:CPBG29_18J , MODEL:CPBG34_18J) + FREQ:60HZ + IDRY:Y + MAPPR:CRNASME + MOVOL:575V

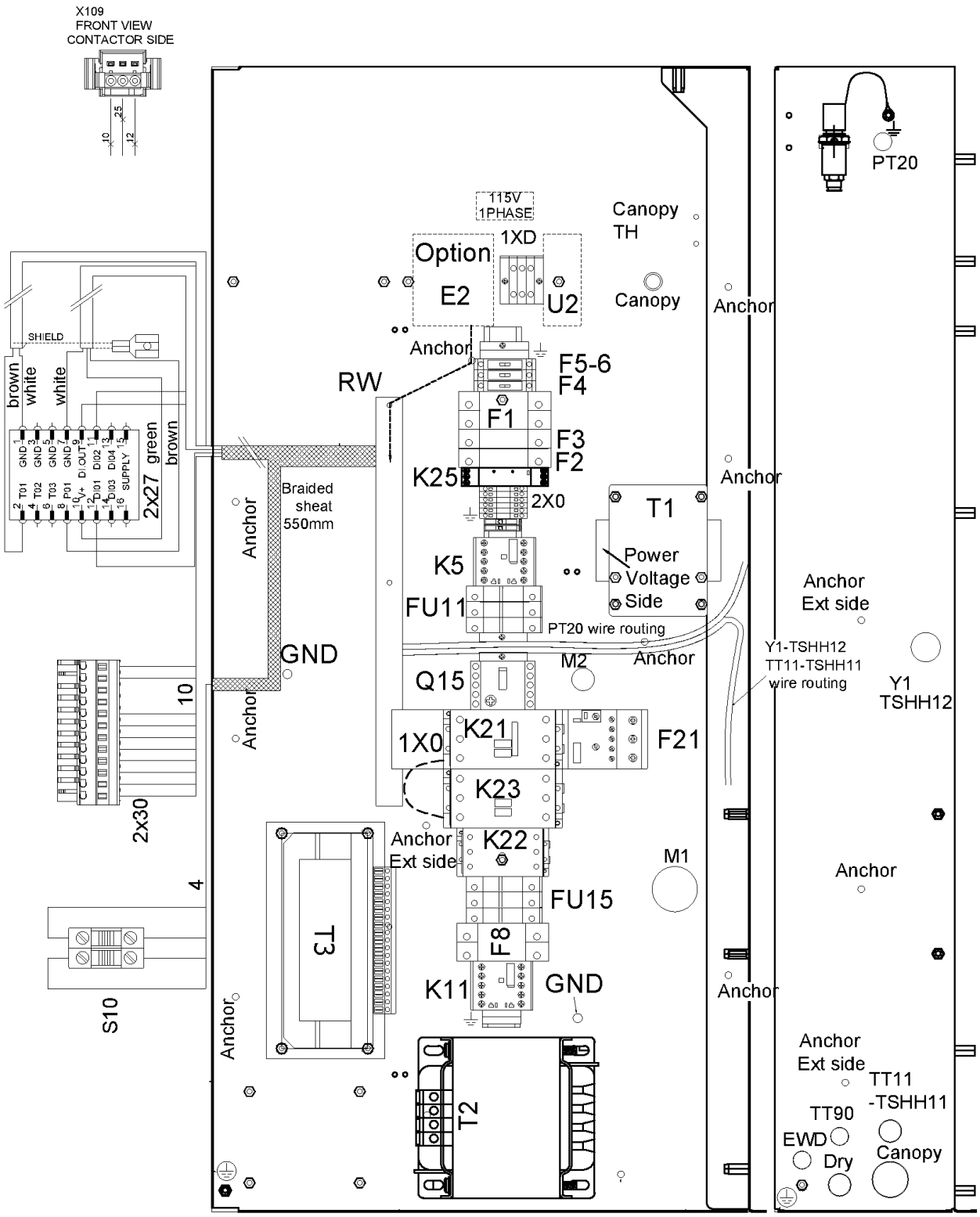

Ref	Part Number	Qty	Name	Validity	EL
	1089 9168 63	2	FUSE	(21/11/2018 - ...)	F1
	1089 9594 02	1	FUSE HOLDER	(21/11/2018 - ...)	F1
	1089 0591 31	1	FUSE	(21/11/2018 - ...)	F3
	1089 9594 01	1	FUSE HOLDER	(21/11/2018 - ...)	F3
	1089 9168 77	2	FUSE	(21/11/2018 - ...)	F5-6
	1088 1510 38	2	FUSE HOLDER	(21/11/2018 - ...)	F5-6
	1088 1510 39	2	END SECTION	(21/11/2018 - ...)	F5-6
	1089 9168 79	1	FUSE	(21/11/2018 - ...)	F4
	1088 1510 38	1	FUSE HOLDER	(21/11/2018 - ...)	F4
	1088 1510 39	1	END SECTION	(21/11/2018 - ...)	F4
	1089 9168 42	1	FUSE	(21/11/2018 - ...)	F8
	1089 9594 04	1	FUSE HOLDER	(21/11/2018 - ...)	F8
	1088 1510 13	5	TERMINAL	(21/11/2018 - ...)	2X0
	1088 1515 16	1	END PLATE	(21/11/2018 - ...)	2X0
	1089 0506 09	2	EARTH-TERMINAL	(21/11/2018 - ...)	2X0
	~~1088 0031 81~~	4	END STOP	(21/11/2018 - ...)	2X0
	Substituted by:	1089 0577 82 - END RETAINER (quantity: 1)			
	1088 1510 10	1	EARTH TERMINAL	(21/11/2018 - ...)	2X0
	1088 1510 14	1	TERMINAL	(21/11/2018 - ...)	2X0
	1088 1510 10	2	EARTH TERMINAL	(28/02/2019 - ...)	2X0
	1088 1510 14	2	TERMINAL	(28/02/2019 - ...)	2X0
	0694 5900 05	3	TAB	(21/11/2018 - 27/02/2019)	
	1088 0037 81	1	CONNECTOR	(21/11/2018 - ...)	2X27
	1088 0031 32	1	CONNECTOR	(21/11/2018 - ...)	2X30
	1088 0037 31	1	CONNECTOR 3-POLE	(21/11/2018 - ...)	X109
	1089 9513 89	1	EMERGENCY STOP PUSH BUTTON	(21/11/2018 - ...)	S10
	1089 9482 98	2	NC CONTACT	(21/11/2018 - ...)	S10
	1089 9482 95	1	MODULE HOLDER	(21/11/2018 - ...)	S10
	1089 9125 13	1	DECAL	(21/11/2018 - ...)	S10
	1088 0153 03	1	CONNECTION HEAD	(21/11/2018 - ...)	XY1
	1088 0021 92	1	CONNECTOR	(21/11/2018 - ...)	XTT11-TSHH1
	1088 0021 93	4	TERMINAL PIN	(21/11/2018 - ...)	XTT11-TSHH1
	2204 1039 00	1	PRESSURE SENSOR	(21/11/2018 - ...)	PT20
	1088 0021 59	1	CONNECTOR FEMALE	(21/11/2018 - ...)	PT20
	1088 0021 60	3	WIRE SEAL	(21/11/2018 - ...)	PT20
	1088 0021 61	3	TERMINAL PIN	(21/11/2018 - ...)	PT20
	2204 1407 00	1	STRAIGHT FITTING	(21/11/2018 - ...)	PT20
	0348 0110 03	1	ANCHOR PLATE	(21/11/2018 - ...)	PT20
	0348 0101 13	1	CABLE TIE	(21/11/2018 - ...)	PT20
	6236 3126 00	10	ANCHOR	(21/11/2018 - ...)	
	2204 1487 00	1	CUBICLE BOX	(21/11/2018 - ...)	
	2205 0325 09	2	SERVICE DIAGRAM	(28/02/2019 - ...)	
	2205 0325 70	2	ELECTRICAL LIST	(21/11/2018 - ...)	
	2200 7723 35	1	GLOSSARY ELECTRICAL PARTS	(21/11/2018 - ...)	
	2204 2198 12	1	LABEL	(21/11/2018 - ...)	
	2204 2198 21	1	LABEL	(21/11/2018 - ...)	
	2202 2610 02	1	LABEL	(21/11/2018 - ...)	
	2203 0541 10	1	LABEL	(21/11/2018 - ...)	
	2204 2155 04	1	LABEL	(21/11/2018 - ...)	

Legend:

FREQ:60HZ - Frequency:60 Hz
MODEL:CPBG20_18J - Model:CPBg 20
MODEL:CPBG34_18J - Model:CPBg 34
IDRY:Y - Integrated dryer:Yes
MODEL:CPBG25_18J - Model:CPBg 25
MOVOL:575V - Supply voltage:575 V
MAPPR:CRNASME - Pressure Vessel Approval:CRN (based on ASME)
MODEL:CPBG29_18J - Model:CPBg 29

43 - Cubicle components CPBg - 20-34 - 575V/60Hz - With dryer - Gear driven

(MODEL:CPBG20_18J , MODEL:CPBG25_18J , MODEL:CPBG29_18J , MODEL:CPBG34_18J) + FREQ:60HZ + IDRY:Y + MAPPR:CRNASME + MOVOL:575V

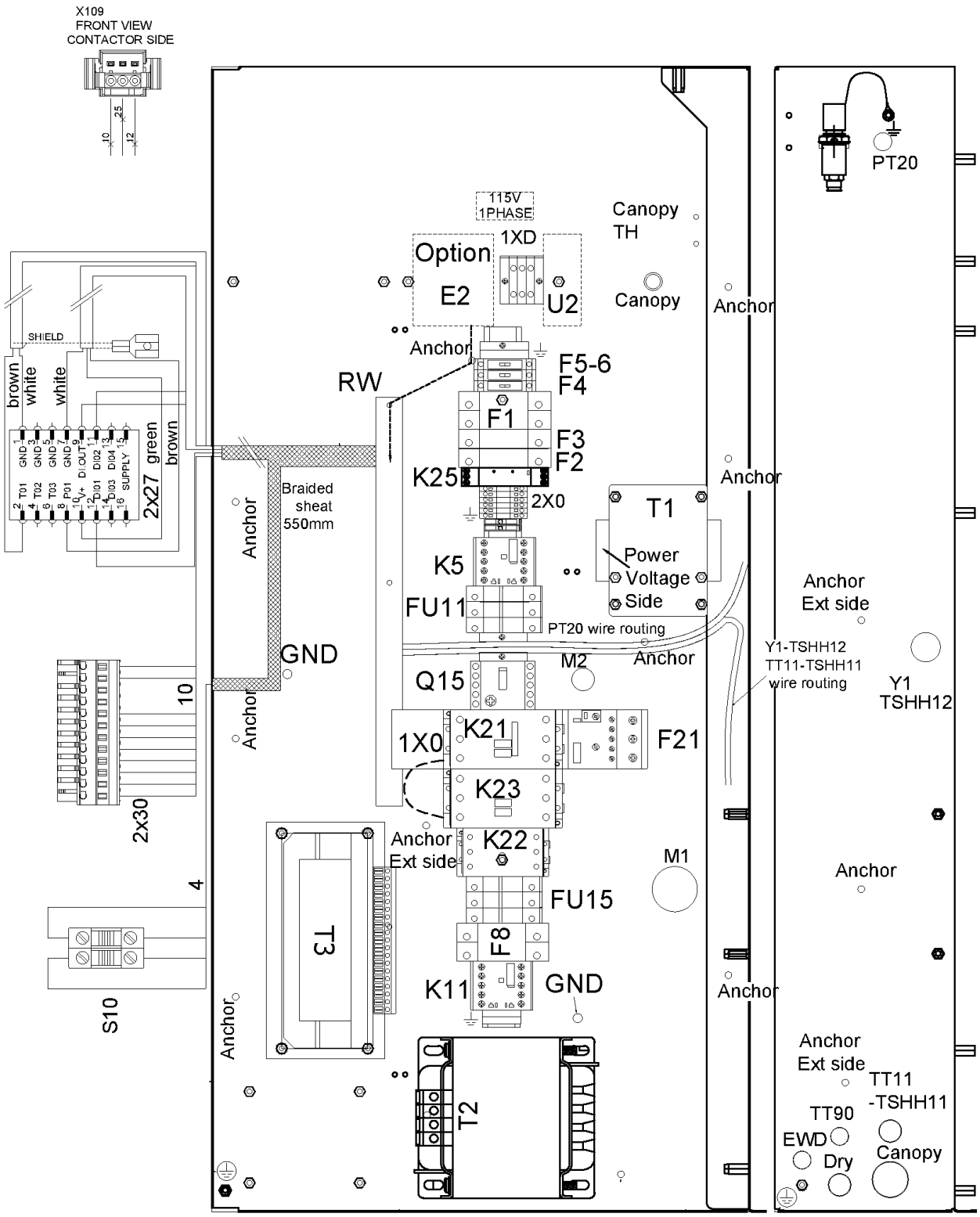

43 - Cubicle components CPBg - 20-34 - 575V/60Hz - With dryer - Gear driven

(MODEL:CPBG20_18J , MODEL:CPBG25_18J , MODEL:CPBG29_18J , MODEL:CPBG34_18J) + FREQ:60HZ + IDRY:Y + MAPPR:CRNASME + MOVOL:575V

Ref	Part Number	Qty	Name	Validity	EL
	2202 2610 01	1	LABEL	**(21/11/2018 - ...)**	
	~~1089 0362 50~~	2	SWITCH	**(21/11/2018 - ...)** MODEL:CPBG29_18J	
	Substituted by:	1089 9482 98 - NC CONTACT 3SU1400-1AA10-1CA0 (quantity: 1)			

Legend:

FREQ:60HZ - Frequency:60 Hz
MODEL:CPBG20_18J - Model:CPBg 20
MODEL:CPBG34_18J - Model:CPBg 34
IDRY:Y - Integrated dryer:Yes
MODEL:CPBG25_18J - Model:CPBg 25
MOVOL:575V - Supply voltage:575 V
MAPPR:CRNASME - Pressure Vessel Approval:CRN (based on ASME)
MODEL:CPBG29_18J - Model:CPBg 29

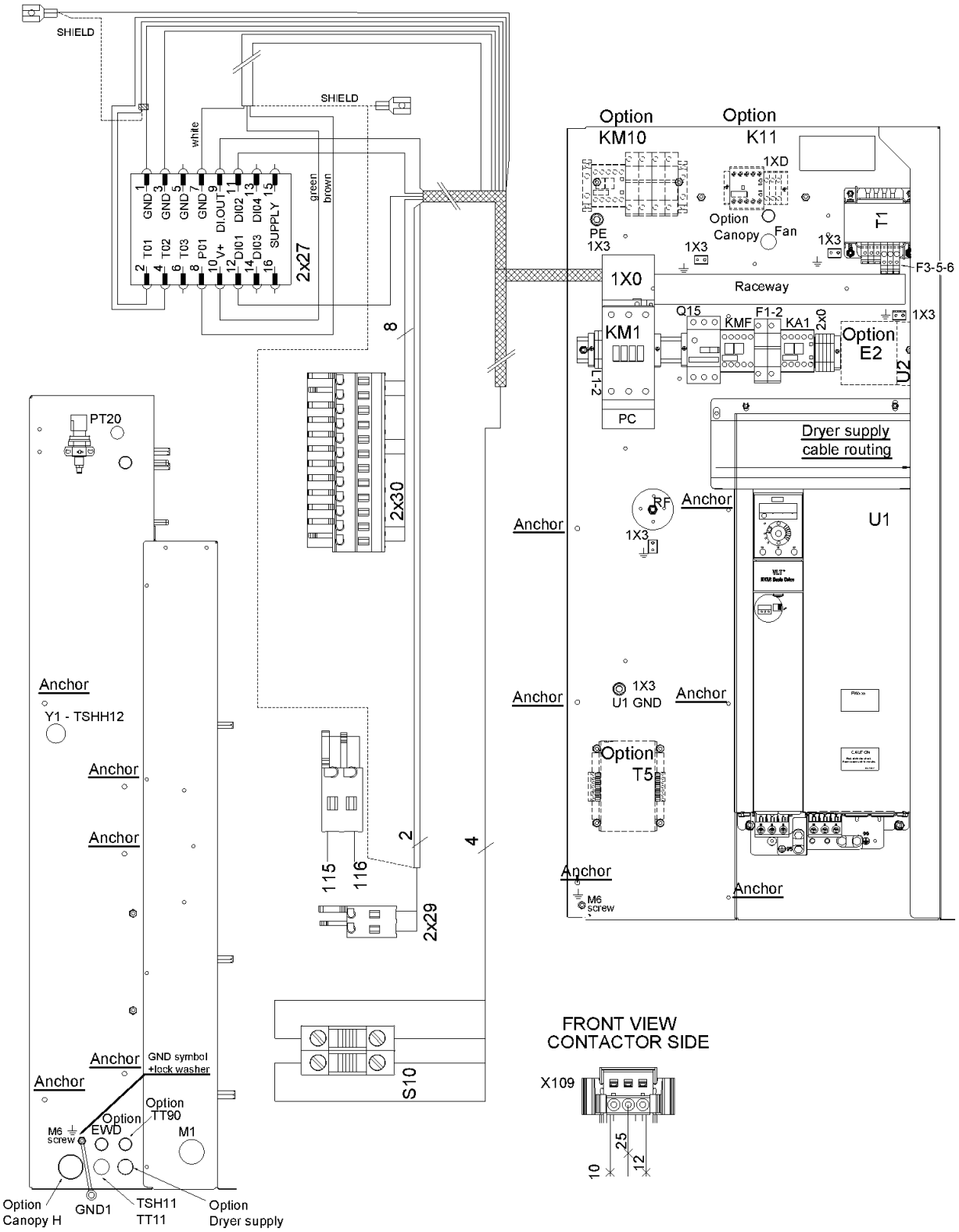
SHIELD
SHIELD
white
green
brown
GND 1
GND 3
GND 5
GND 7
GND 9
DI.OUT 11
DI02 13
DI04 15
SUPPLY
T01 2
T02 4
T03 6
P01 8
V+ 10
DI01 12
DI03 14
16
2x27
8
2x30
2
4
115
116
2x29
S10
PT20
Anchor
Y1 - TSHH12
Anchor
Anchor
Anchor
GND symbol
+lock washer
Anchor
Option
TT90
Option
EWD
M6
screw
M1
Option
Canopy H
GND1
TSH11
TT11
Option
Dryer supply
Option
KM10
Option
K11
1XD
PE
1X3
Option
Canopy
Fan
1X3
1X3
T1
F3-5-6
1X0
Raceway
Q15
KMF
F1-2
KA1
2x0
1X3
KM1
Option
E2
U2
PC
Dryer supply
cable routing
RF
1X3
Anchor
Anchor
U1
Anchor
1X3
U1 GND
Anchor
Option
T5
Anchor
M6
screw
Anchor
FRONT VIEW
CONTACTOR SIDE
X109
10
25
12

Ref	Part Number	Qty	Name	Validity	EL
	2205 0144 11	1	CUBICLE	(19/12/2018 - ...) MODEL:CPVD21_18J	
	2205 0144 12	1	CUBICLE	(19/12/2018 - ...) MODEL:CPVD25_18J	
	2205 0144 13	1	CUBICLE	(19/12/2018 - ...) MODEL:CPVD29_18J	
	2205 0144 14	1	CUBICLE	(19/12/2018 - ...) MODEL:CPVD34_18J	
	1089 9362 04	1	COVER FOR TERMINAL	(19/12/2018 - ...) MODEL:CPVD29_18J , MODEL:CPVD34_18J	1X0
	1089 9267 96	1	SUPPLY BLOCK	(19/12/2018 - ...) MODEL:CPVD21_18J , MODEL:CPVD25_18J	1X0
	2202 9049 00	3	INSULATION FOR TERMINAL	(19/12/2018 - ...) MODEL:CPVD29_18J , MODEL:CPVD34_18J	1X0
	1622 1692 00	3	CONNECTION ELEMENT	(19/12/2018 - ...) MODEL:CPVD29_18J , MODEL:CPVD34_18J	1X0
	1089 9496 93	1	CONTACTOR	(19/12/2018 - ...) MODEL:CPVD21_18J	KM1
	1089 9496 96	1	CONTACTOR	(19/12/2018 - ...) MODEL:CPVD29_18J , MODEL:CPVD34_18J	KM1
	1089 9496 94	1	CONTACTOR	(19/12/2018 - ...) MODEL:CPVD25_18J	KM1
	1089 9216 15	1	COVER	(19/12/2018 - ...) MODEL:CPVD21_18J , MODEL:CPVD25_18J	PC
	1089 9216 16	1	COVER	(19/12/2018 - ...) MODEL:CPVD29_18J , MODEL:CPVD34_18J	PC
	1089 9438 41	1	CONTACTOR	(19/12/2018 - ...)	KMF
	1089 9267 23	1	CIRCUIT BREAKER	(19/12/2018 - ...) MODEL:CPVD25_18J , MODEL:CPVD29_18J	Q15
	1089 9267 21	1	CIRCUIT BREAKER	(19/12/2018 - ...) MODEL:CPVD21_18J	Q15
	1089 9267 27	1	CIRCUIT BREAKER	(19/12/2018 - ...) MODEL:CPVD34_18J	Q15
	1089 9267 56	1	AUX CONTACT	(19/12/2018 - ...)	Q15
	1089 9421 85	1	AUX RELAY	(19/12/2018 - ...)	KA1
	2204 2114 00	1	CONVERTER	(19/12/2018 - ...) MODEL:CPVD34_18J	U1
	2204 2113 00	1	CONVERTER	(19/12/2018 - ...) MODEL:CPVD21_18J , MODEL:CPVD25_18J , MODEL:CPVD29_18J	U1
	2204 1633 01	1	LABEL	(19/12/2018 - ...)	
	2204 1634 08	1	LABEL	(19/12/2018 - ...)	
	2204 1368 01	1	FERRITE	(19/12/2018 - ...)	
	2204 1292 01	1	FILTER	(19/12/2018 - ...)	RF
	0698 5142 06	1	CABLE GLAND	(19/12/2018 - ...) MODEL:CPVD21_18J , MODEL:CPVD25_18J	
	0698 5140 76	1	CABLE GLAND	(19/12/2018 - ...) MODEL:CPVD29_18J , MODEL:CPVD34_18J	
	0697 9809 25	1	LOCK NUT	(19/12/2018 - ...)	
	0698 5141 07	1	CABLE GLAND	(19/12/2018 - ...)	PT20
	0697 9809 59	1	LOCK NUT	(19/12/2018 - ...)	PT20
	0698 5141 21	1	CABLE GLAND	(19/12/2018 - ...)	TT11-TSHH11
	0698 5148 84	1	MULTIPLE SEALING	(19/12/2018 - ...)	TT11-TSHH11
	0697 9809 53	1	LOCK NUT	(19/12/2018 - ...)	TT11-TSHH11
	0698 5141 17	1	CABLE GLAND	(19/12/2018 - ...)	Y1+TSHH12
	0697 9809 54	1	LOCK NUT	(19/12/2018 - ...)	Y1+TSHH12
	0698 5148 72	1	SEAL	(19/12/2018 - ...)	Y1+TSHH12
	0698 5141 21	1	CABLE GLAND	(19/12/2018 - ...)	FAN
	0697 9809 53	1	LOCK NUT	(19/12/2018 - ...)	FAN
	2202 9105 01	1	TRANSFORMER	(19/12/2018 - ...)	T1
	1089 0612 25	2	FUSE	(19/12/2018 - ...)	F1/F2
	1089 9594 02	1	FUSE HOLDER	(19/12/2018 - ...)	F1/F2
	~~1088 0031 81~~	4	END STOP	(19/12/2018 - ...)	2X0
	Substituted by:	1089 0577 82 - END RETAINER (quantity: 1)			
	1089 0506 09	2	EARTH-TERMINAL	(19/12/2018 - ...)	2X0
	1088 1510 13	5	TERMINAL	(19/12/2018 - ...)	2X0
	1088 1515 16	1	END PLATE	(19/12/2018 - ...)	2X0

Legend:

FREQ:60HZ - Frequency:60 Hz
MODEL:CPVD25_18J - Model:CPVSd 25
MOVOL:380V - Supply voltage:380 V
MAPPR:ASME - Pressure Vessel Approval:ASME (U Stamp)
MODEL:CPVD29_18J - Model:CPVSd 29
MODEL:CPVD21_18J - Model:CPVSd 21
MODEL:CPVD34_18J - Model:CPVSd 34

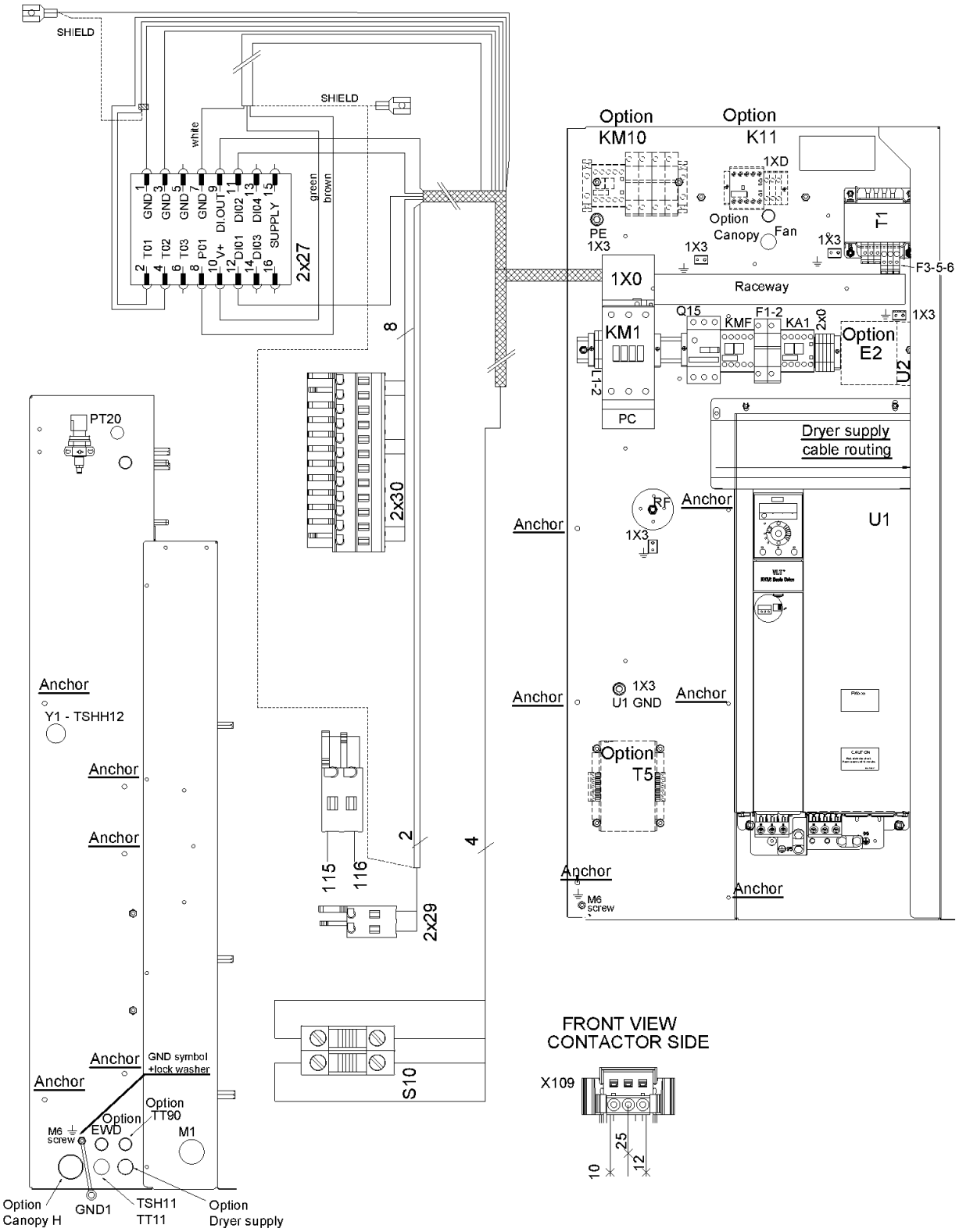
SHIELD
SHIELD
white
green
brown
GND 1
GND 3
GND 5
GND 7
GND 9
DI.OUT 11
DI02 13
DI04 15
SUPPLY
T01 2
T02 4
T03 6
P01 8
V+ 10
DI01 12
DI03 14
16
2x27
8
2x30
2
4
115
116
2x29
S10
PT20
Anchor
Y1 - TSHH12
Anchor
Anchor
Anchor
GND symbol
+lock washer
Anchor
Option
TT90
Option
EWD
M6
screw
M1
Option
Canopy H
GND1
TSH11
TT11
Option
Dryer supply
Option
KM10
Option
K11
1XD
PE
1X3
Option
Canopy
Fan
1X3
1X3
T1
F3-5-6
1X0
Raceway
Q15
KMF
F1-2
KA1
2x0
1X3
KM1
Option
E2
U2
PC
Dryer supply
cable routing
RF
1X3
Anchor
Anchor
U1
Anchor
1X3
U1 GND
Anchor
Option
T5
Anchor
M6
screw
Anchor
FRONT VIEW
CONTACTOR SIDE
X109
10
25
12

Ref	Part Number	Qty	Name	Validity	EL
	0694 5900 05	3	TAB	(19/12/2018 - ...)	1X3
	1088 0037 81	1	CONNECTOR	(19/12/2018 - ...)	2X27
	1088 0037 30	1	CONNECTOR 2-POLE	(19/12/2018 - ...)	2X29
	1088 0037 31	1	CONNECTOR 3-POLE	(19/12/2018 - ...)	X109
	1088 0031 32	1	CONNECTOR	(19/12/2018 - ...)	2X30
	1089 9513 89	1	EMERGENCY STOP PUSH BUTTON	(19/12/2018 - ...)	S10
	1089 9482 98	2	NC CONTACT	(19/12/2018 - ...)	S10
	1089 9482 95	1	MODULE HOLDER	(19/12/2018 - ...)	S10
	2204 1229 01	1	WIRE SUPPORT	(19/12/2018 - ...)	S10
	1089 9125 13	1	DECAL	(19/12/2018 - ...)	S10
	1088 0153 03	1	CONNECTION HEAD	(19/12/2018 - ...)	XY1
	1088 0021 92	1	CONNECTOR	(19/12/2018 - ...)	TT11-TSH11
	1088 0021 93	4	TERMINAL PIN	(19/12/2018 - ...)	TT11-TSH11
	1088 0021 59	1	CONNECTOR FEMALE	(19/12/2018 - ...)	PT20
	1088 0021 60	3	WIRE SEAL	(19/12/2018 - ...)	PT20
	1088 0021 61	3	TERMINAL PIN	(19/12/2018 - ...)	PT20
	2204 1039 00	1	PRESSURE SENSOR	(19/12/2018 - ...)	PT20
	2204 1407 00	1	STRAIGHT FITTING	(19/12/2018 - ...)	PT20
	0346 1000 56	1	CLAMP PIPE	(19/12/2018 - ...)	PT20
	2202 9321 00	1	CLAMP	(19/12/2018 - ...)	PT20
	6236 3126 00	11	ANCHOR	(19/12/2018 - ...)	
	2204 1758 01	1	SHEET METAL CUBICLE	(19/12/2018 - ...)	
	2204 1758 02	1	SHEET METAL CUBICLE	(19/12/2018 - ...)	
	2204 1758 03	1	DUCT	(19/12/2018 - ...)	
	2204 1758 04	1	COVER	(19/12/2018 - ...)	
	2205 0144 00	2	SERVICE DIAGRAM	(19/12/2018 - ...)	
	2205 0144 20	2	ELECTRICAL LIST	(19/12/2018 - ...)	
	2200 7723 35	1	GLOSSARY ELECTRICAL PARTS	(19/12/2018 - ...)	
	2204 1227 51	1	SINGLE LINE LABEL	(19/12/2018 - ...)	

Legend:

FREQ:60HZ - Frequency:60 Hz
MAPPR:ASME - Pressure Vessel Approval:ASME (U Stamp)
MODEL:CPVD21_18J - Model:CPVSd 21
MODEL:CPVD25_18J - Model:CPVSd 25
MODEL:CPVD29_18J - Model:CPVSd 29
MODEL:CPVD34_18J - Model:CPVSd 34
MOVOL:380V - Supply voltage:380 V

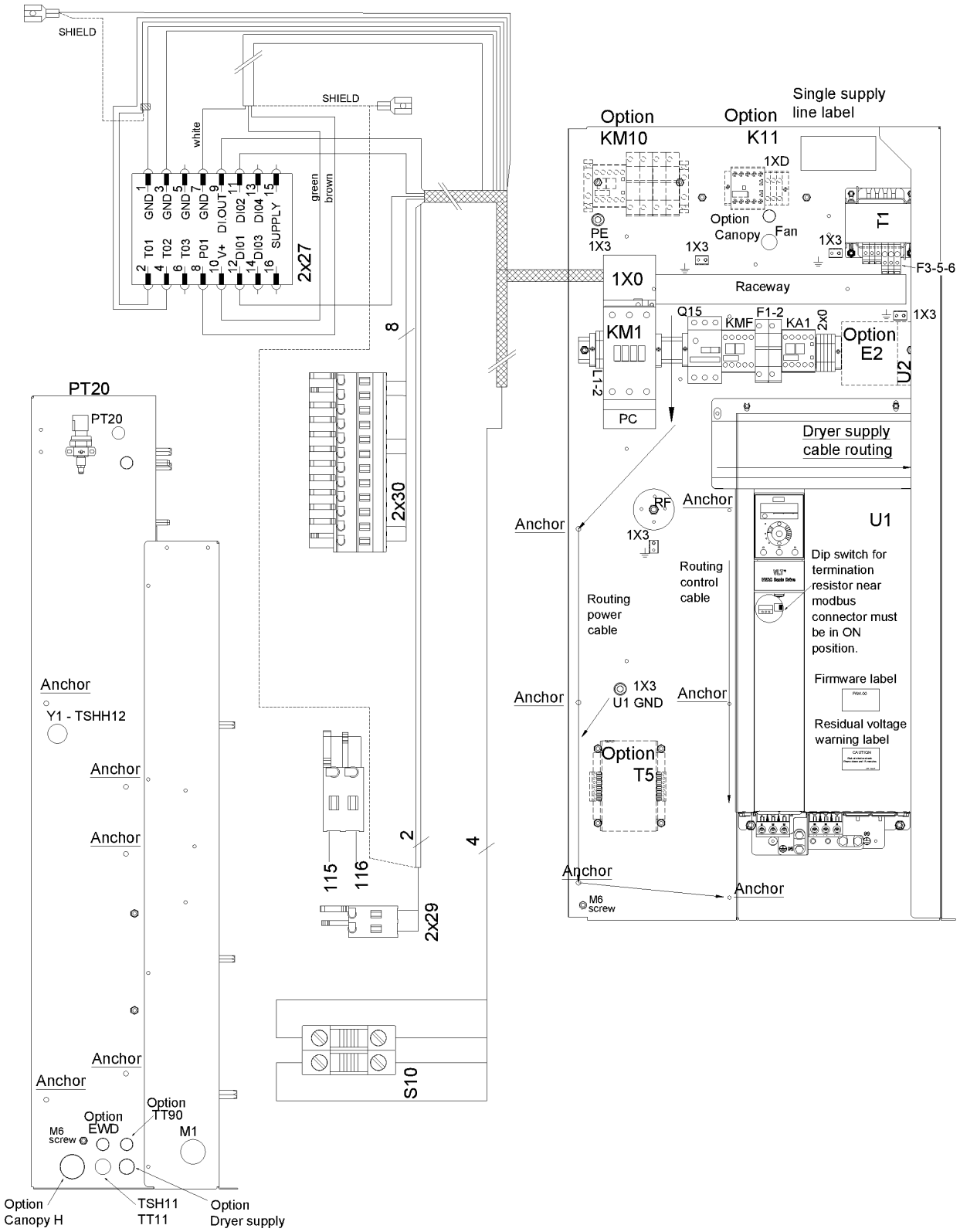
SHIELD
SHIELD
white
green
brown
GND 1
GND 3
GND 5
GND 7
DI.OUT 9
DI02 11
DI04 13
SUPPLY 15
T01 2
T02 4
T03 6
P01 8
V+ 10
DI01 12
DI03 14
16
2x27
8
2x30
PT20
PT20
Anchor
Y1 - TSHH12
Anchor
Anchor
Anchor
Anchor
M6 screw
Option EWD
Option TT90
M1
Option Canopy H
TSH11 TT11
Option Dryer supply
115
116
2
4
2x29
S10
Single supply line label
Option KM10
Option K11
1XD
PE 1X3
1X3
Option Canopy
Fan
1X3
T1
F3-5-6
1X0
Raceway
Q15
F1-2
KMF
KA1
2x0
1X3
KM1
Option E2
U2
L1-2
PC
Dryer supply cable routing
RF
Anchor
Anchor
1X3
U1
Routing control cable
Routing power cable
Dip switch for termination resistor near modbus connector must be in ON position.
Firmware label
Anchor
1X3
U1 GND
Anchor
Residual voltage warning label
Option T5
Anchor
Anchor
M6 screw

Ref	Part Number	Qty	Name	Validity	EL
	2205 0144 01	1	CUBICLE	**(22/08/2018 - ...)** MODEL:CPVD21_18J	
	2205 0144 02	1	CUBICLE	**(22/08/2018 - ...)** MODEL:CPVD25_18J	
	2205 0144 03	1	CUBICLE	**(22/08/2018 - ...)** MODEL:CPVD29_18J	
	2205 0144 04	1	CUBICLE	**(22/08/2018 - ...)** MODEL:CPVD34_18J	
	1089 9362 04	1	COVER FOR TERMINAL	**(22/08/2018 - ...)** MODEL:CPVD34_18J	1X0
	1089 9267 96	1	SUPPLY BLOCK	**(22/08/2018 - ...)** MODEL:CPVD21_18J , MODEL:CPVD25_18J , MODEL:CPVD29_18J	1X0
	2202 9049 00	3	INSULATION FOR TERMINAL	**(22/08/2018 - ...)** MODEL:CPVD34_18J	1X0
	1622 1692 00	3	CONNECTION ELEMENT	**(22/08/2018 - ...)** MODEL:CPVD34_18J	1X0
	1089 9496 93	1	CONTACTOR	**(22/08/2018 - ...)** MODEL:CPVD21_18J	K21
	1089 9496 94	1	CONTACTOR	**(22/08/2018 - ...)** MODEL:CPVD25_18J , MODEL:CPVD29_18J	K21
	1089 9496 96	1	CONTACTOR	**(22/08/2018 - ...)** MODEL:CPVD34_18J	K21
	1089 9216 15	1	COVER	**(22/08/2018 - ...)** MODEL:CPVD21_18J , MODEL:CPVD25_18J , MODEL:CPVD29_18J	PC
	1089 9216 16	1	COVER	**(22/08/2018 - ...)** MODEL:CPVD34_18J	PC
	1089 9438 41	1	CONTACTOR	**(22/08/2018 - ...)**	KMF
	1089 9267 26	1	CIRCUIT BREAKER	**(22/08/2018 - ...)** MODEL:CPVD29_18J , MODEL:CPVD34_18J	Q15
	1089 9267 21	1	CIRCUIT BREAKER	**(22/08/2018 - ...)** MODEL:CPVD21_18J	Q15
	1089 9267 23	1	CIRCUIT BREAKER	**(22/08/2018 - ...)** MODEL:CPVD25_18J	Q15
	1089 9267 56	1	AUX CONTACT	**(22/08/2018 - ...)**	Q15
	1089 9421 85	1	AUX RELAY	**(22/08/2018 - ...)**	K5
	2204 2113 00	1	CONVERTER	**(22/08/2018 - ...)** MODEL:CPVD21_18J , MODEL:CPVD25_18J , MODEL:CPVD29_18J	U1
	2204 2114 00	1	CONVERTER	**(22/08/2018 - ...)** MODEL:CPVD34_18J	U1
	2204 1633 01	1	LABEL	**(22/08/2018 - ...)**	
	2204 1634 08	1	LABEL	**(22/08/2018 - ...)**	
	2204 1368 01	1	FERRITE	**(22/08/2018 - ...)**	
	2204 1292 01	1	FILTER	**(22/08/2018 - ...)**	RF
	0698 5142 06	1	CABLE GLAND	**(22/08/2018 - ...)**	
	0697 9809 25	1	LOCK NUT	**(22/08/2018 - ...)**	
	0698 5141 07	1	CABLE GLAND	**(19/12/2018 - ...)**	
	0697 9809 54	1	LOCK NUT	**(22/08/2018 - 18/12/2018)**	
	0698 5141 07	1	CABLE GLAND	**(22/08/2018 - 18/12/2018)**	PT20
	0697 9809 59	1	LOCK NUT	**(19/12/2018 - ...)**	PT20
	0698 5141 21	1	CABLE GLAND	**(22/08/2018 - ...)**	TT11-TSHH11
	0698 5148 84	1	MULTIPLE SEALING	**(22/08/2018 - ...)**	TT11-TSHH11
	0697 9809 53	1	LOCK NUT	**(22/08/2018 - ...)**	TT11-TSHH11
	0698 5141 17	1	CABLE GLAND	**(22/08/2018 - ...)**	Y1+TSHH12
	0697 9809 54	1	LOCK NUT	**(22/08/2018 - ...)**	Y1+TSHH12
	0698 5148 72	1	SEAL	**(22/08/2018 - ...)**	Y1+TSHH12
	0698 5141 21	1	CABLE GLAND	**(22/08/2018 - ...)**	FAN
	0697 9809 53	1	LOCK NUT	**(22/08/2018 - ...)**	FAN
	2202 9106 01	1	TRANSFORMER	**(22/08/2018 - ...)**	T1
	1089 0612 24	2	FUSE	**(22/08/2018 - ...)**	F1/F2
	1089 9594 02	1	FUSE HOLDER	**(22/08/2018 - ...)**	F1/F2
	~~1089 9037 48~~	0	FUSE	**(22/08/2018 - ...)**	F3
	Substituted by:	1089 9037 04 - FUSE 6.3A T 5X20 (quantity: 1)			
	1089 9037 42	0	FUSE	**(22/08/2018 - ...)**	F5-6
	~~1088 0031 81~~	4	END STOP	**(22/08/2018 - ...)**	2X0
	Substituted by:	1089 0577 82 - END RETAINER (quantity: 1)			

Legend:

FREQ:50HZ - Frequency:50 Hz
MAPPR:AS1210 - Pressure Vessel Approval:AS1210
MAPPR:CE - Pressure Vessel Approval:CE
MAPPR:MOM - Pressure Vessel Approval:MOM
MAPPR:SA - Pressure Vessel Approval:SA
MODEL:CPVD21_18J - Model:CPVSd 21
MODEL:CPVD25_18J - Model:CPVSd 25
MODEL:CPVD29_18J - Model:CPVSd 29
MODEL:CPVD34_18J - Model:CPVSd 34
MOVOL:400V - Supply voltage:400 V

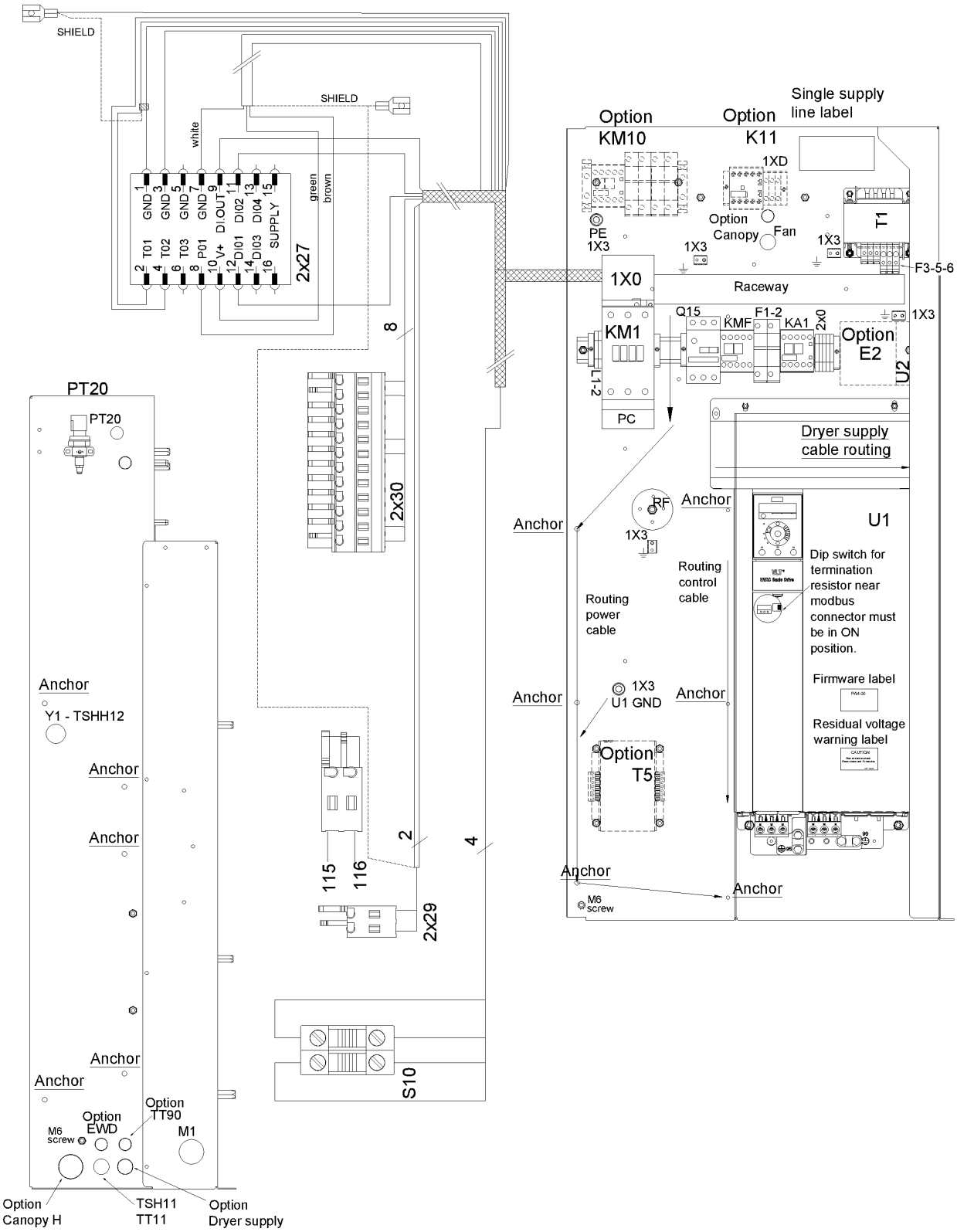
SHIELD
SHIELD
white
green
brown
GND 1
GND 3
GND 5
GND 7
DI.OUT 9
DI02 11
DI04 13
SUPPLY 15
TO1 2
TO2 4
TO3 6
PO1 8
V+ 10
DI01 12
DI03 14
16
2x27
8
2x30
PT20
PT20
Anchor
Y1 - TSHH12
Anchor
Anchor
Anchor
Anchor
M6 screw
Option EWD
Option TT90
M1
Option Canopy H
TSH11 TT11
Option Dryer supply
115
116
2
4
2x29
S10
Option KM10
Option K11
Single supply line label
1XD
PE 1X3
1X3
Option Canopy
Fan
1X3
T1
F3-5-6
1X0
Raceway
KM1
Q15
KMF
F1-2
KA1
2x0
1X3
Option E2
U2
L1-2
PC
Dryer supply cable routing
RF
Anchor
1X3
Anchor
U1
Routing control cable
Routing power cable
Dip switch for termination resistor near modbus connector must be in ON position.
Firmware label
Anchor
1X3 U1 GND
Anchor
Residual voltage warning label
Option T5
Anchor
Anchor
M6 screw

Ref	Part Number	Qty	Name	Validity	EL
	1089 0506 09	2	EARTH-TERMINAL	(22/08/2018 - ...)	2X0
	1088 1510 13	5	TERMINAL	(22/08/2018 - ...)	2X0
	1088 1515 16	1	END PLATE	(22/08/2018 - ...)	2X0
	0694 5900 05	3	TAB	(22/08/2018 - ...)	1X3
	1088 0037 81	1	CONNECTOR	(22/08/2018 - ...)	2X27
	1088 0037 30	1	CONNECTOR 2-POLE	(22/08/2018 - ...)	2X29
	1088 0037 31	1	CONNECTOR 3-POLE	(22/08/2018 - ...)	2X30
	1088 0031 32	1	CONNECTOR	(22/08/2018 - ...)	X109
	1089 9513 89	1	EMERGENCY STOP PUSH BUTTON	(22/08/2018 - ...)	S10
	1089 9482 98	2	NC CONTACT	(22/08/2018 - ...)	S10
	1089 9482 95	1	MODULE HOLDER	(22/08/2018 - ...)	S10
	2204 1229 01	1	WIRE SUPPORT	(22/08/2018 - ...)	S10
	1089 9125 13	1	DECAL	(22/08/2018 - ...)	S10
	1088 0153 03	1	CONNECTION HEAD	(22/08/2018 - ...)	XY1
	1088 0021 92	1	CONNECTOR	(22/08/2018 - ...)	TT11-TSHH11
	1088 0021 93	4	TERMINAL PIN	(22/08/2018 - ...)	TT11-TSHH11
	1088 0021 59	1	CONNECTOR FEMALE	(22/08/2018 - ...)	PT20
	1088 0021 60	3	WIRE SEAL	(22/08/2018 - ...)	PT20
	1088 0021 61	3	TERMINAL PIN	(22/08/2018 - ...)	PT20
	2204 1039 00	1	PRESSURE SENSOR	(22/08/2018 - ...)	PT20
	2204 1407 00	1	STRAIGHT FITTING	(22/08/2018 - ...)	PT20
	0346 1000 56	1	CLAMP PIPE	(22/08/2018 - ...)	PT20
	2202 9321 00	1	CLAMP	(22/08/2018 - ...)	PT20
	6236 3126 00	11	ANCHOR	(22/08/2018 - ...)	
	2204 1758 01	1	SHEET METAL CUBICLE	(22/08/2018 - ...)	
	2204 1758 02	1	SHEET METAL CUBICLE	(22/08/2018 - ...)	
	2204 1758 03	1	DUCT	(22/08/2018 - ...)	
	2204 1758 04	1	COVER	(22/08/2018 - ...)	
	2205 0144 00	2	SERVICE DIAGRAM	(22/08/2018 - ...)	
	2205 0144 10	2	ELECTRICAL LIST	(22/08/2018 - ...)	
	2200 7723 35	1	GLOSSARY ELECTRICAL PARTS	(22/08/2018 - ...)	
	2204 1227 51	1	SINGLE LINE LABEL	(22/08/2018 - ...)	

Legend:

FREQ:50HZ - Frequency:50 Hz
MAPPR:AS1210 - Pressure Vessel Approval:AS1210
MAPPR:CE - Pressure Vessel Approval:CE
MAPPR:MOM - Pressure Vessel Approval:MOM
MAPPR:SA - Pressure Vessel Approval:SA
MODEL:CPVD21_18J - Model:CPVSd 21
MODEL:CPVD25_18J - Model:CPVSd 25
MODEL:CPVD29_18J - Model:CPVSd 29
MODEL:CPVD34_18J - Model:CPVSd 34
MOVOL:400V - Supply voltage:400 V

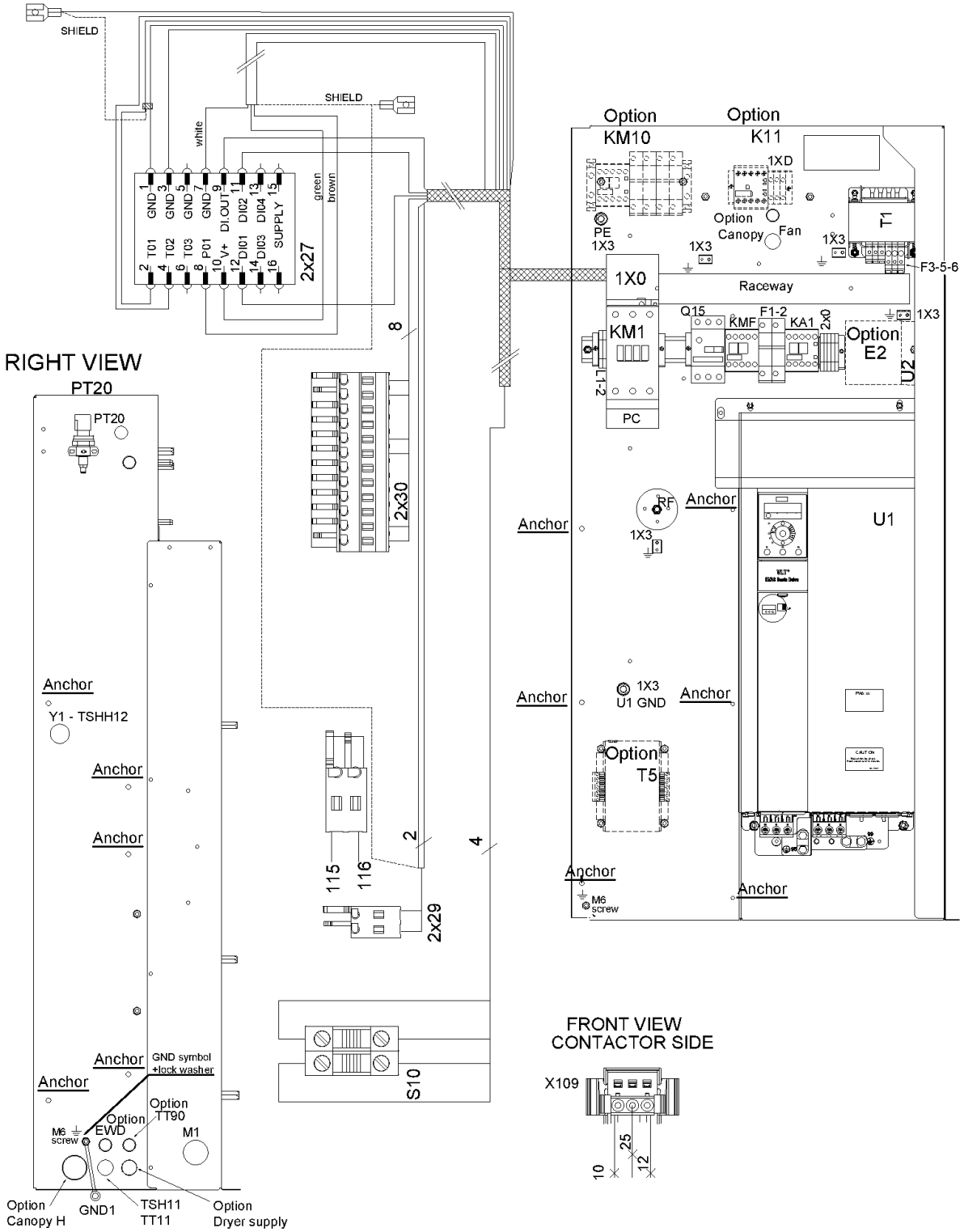
SHIELD
SHIELD
white
green
brown
GND 1
GND 3
GND 5
GND 7
DI.OUT 9
DI02 11
DI04 13
SUPPLY 15
TO1 2
TO2 4
TO3 6
PO1 8
V+ 10
DI01 12
DI03 14
16
2x27
8
2x30
2
4
115
116
2x29
S10
RIGHT VIEW
PT20
PT20
Anchor
Y1 - TSHH12
Anchor
Anchor
Anchor
GND symbol +lock washer
Anchor
Option TT90
Option EWD
M6 screw
M1
Option Canopy H
GND1
TSH11 TT11
Option Dryer supply
Option KM10
Option K11
1XD
PE 1X3
Option Canopy
Fan
1X3
1X3
T1
F3-5-6
1X0
Raceway
Q15
F1-2
KMF
KA1
2x0
1X3
KM1
Option E2
U2
L1-2
PC
RF
Anchor
1X3
U1
Anchor
1X3 U1 GND
Anchor
Anchor
Option T5
Anchor
M6 screw
Anchor
FRONT VIEW CONTACTOR SIDE
X109
10
25
12

Ref	Part Number	Qty	Name	Validity	EL
	2205 0144 21	1	CUBCILE	**(19/12/2018 - ...)** MODEL:CPVD21_18J	
	2205 0144 22	1	CUBCILE	**(19/12/2018 - ...)** MODEL:CPVD25_18J	
	2205 0144 23	1	CUBCILE	**(19/12/2018 - ...)** MODEL:CPVD29_18J	
	2205 0144 24	1	CUBCILE	**(19/12/2018 - ...)** MODEL:CPVD34_18J	
	1089 9362 04	1	COVER FOR TERMINAL	**(19/12/2018 - ...)** MODEL:CPVD29_18J , MODEL:CPVD34_18J	1X0
	1089 9267 96	1	SUPPLY BLOCK	**(19/12/2018 - ...)** MODEL:CPVD21_18J , MODEL:CPVD25_18J	1X0
	2202 9049 00	3	INSULATION FOR TERMINAL	**(19/12/2018 - ...)** MODEL:CPVD29_18J , MODEL:CPVD34_18J	1X0
	1622 1692 00	3	CONNECTION ELEMENT	**(19/12/2018 - ...)** MODEL:CPVD29_18J , MODEL:CPVD34_18J	1X0
	1089 9496 96	1	CONTACTOR	**(19/12/2018 - ...)** MODEL:CPVD29_18J , MODEL:CPVD34_18J	K21
	1089 9496 94	1	CONTACTOR	**(19/12/2018 - ...)** MODEL:CPVD25_18J	K21
	1089 9496 93	1	CONTACTOR	**(19/12/2018 - ...)** MODEL:CPVD21_18J	K21
	1089 9216 15	1	COVER	**(19/12/2018 - ...)** MODEL:CPVD21_18J , MODEL:CPVD25_18J	PC
	1089 9216 16	1	COVER	**(19/12/2018 - ...)** MODEL:CPVD29_18J , MODEL:CPVD34_18J	PC
	1089 9438 41	1	CONTACTOR	**(19/12/2018 - ...)**	KMF
	1089 9267 21	1	CIRCUIT BREAKER	**(19/12/2018 - ...)** MODEL:CPVD21_18J	Q15
	1089 9267 27	1	CIRCUIT BREAKER	**(19/12/2018 - ...)** MODEL:CPVD34_18J	Q15
	1089 9267 23	1	CIRCUIT BREAKER	**(19/12/2018 - ...)** MODEL:CPVD25_18J , MODEL:CPVD29_18J	Q15
	1089 9267 56	1	AUX CONTACT	**(19/12/2018 - ...)**	Q15
	1089 9421 85	1	AUX RELAY	**(19/12/2018 - ...)**	K5
	2204 2113 00	1	CONVERTER	**(19/12/2018 - ...)** MODEL:CPVD21_18J , MODEL:CPVD25_18J , MODEL:CPVD29_18J	U1
	2204 2114 00	1	CONVERTER	**(19/12/2018 - ...)** MODEL:CPVD34_18J	U1
	2204 1633 01	1	LABEL	**(19/12/2018 - ...)**	
	2204 1634 08	1	LABEL	**(19/12/2018 - ...)**	
	2204 1368 01	1	FERRITE	**(19/12/2018 - ...)**	
	2204 1292 01	1	FILTER	**(19/12/2018 - ...)**	
	0698 5140 76	1	CABLE GLAND	**(19/12/2018 - ...)** MODEL:CPVD29_18J , MODEL:CPVD34_18J	
	0698 5142 06	1	CABLE GLAND	**(19/12/2018 - ...)** MODEL:CPVD21_18J , MODEL:CPVD25_18J	
	0697 9809 25	1	LOCK NUT	**(19/12/2018 - ...)**	
	0698 5141 07	1	CABLE GLAND	**(19/12/2018 - ...)**	PT20
	0697 9809 59	1	LOCK NUT	**(19/12/2018 - ...)**	PT20
	0698 5141 21	1	CABLE GLAND	**(19/12/2018 - ...)**	TT11-TSHH11
	0698 5148 84	1	MULTIPLE SEALING	**(19/12/2018 - ...)**	TT11-TSHH11
	0697 9809 53	1	LOCK NUT	**(19/12/2018 - ...)**	TT11-TSHH11
	0698 5141 17	1	CABLE GLAND	**(19/12/2018 - ...)**	Y1+TSHH12
	0697 9809 54	1	LOCK NUT	**(19/12/2018 - ...)**	Y1+TSHH12
	0698 5148 72	1	SEAL	**(19/12/2018 - ...)**	Y1+TSHH12
	0698 5141 21	1	CABLE GLAND	**(19/12/2018 - ...)**	FAN
	0697 9809 53	1	LOCK NUT	**(19/12/2018 - ...)**	FAN
	2202 9105 01	1	TRANSFORMER	**(19/12/2018 - ...)**	T1
	1089 0612 25	2	FUSE	**(19/12/2018 - ...)**	F1/F2
	1089 9594 02	1	FUSE HOLDER	**(19/12/2018 - ...)**	F1/F2
	~~1088 0031 81~~	4	END STOP	**(19/12/2018 - ...)**	2X0
	Substituted by:	1089 0577 82 - END RETAINER (quantity: 1)			
	1089 0506 09	2	EARTH-TERMINAL	**(19/12/2018 - ...)**	2X0
	1088 1510 13	5	TERMINAL	**(19/12/2018 - ...)**	2X0
	1088 1515 16	1	END PLATE	**(19/12/2018 - ...)**	2X0

Legend:

FREQ:60HZ - Frequency:60 Hz
MODEL:CPVD25_18J - Model:CPVSd 25
MOVOL:440V - Supply voltage:440 V
MAPPR:ASME - Pressure Vessel Approval:ASME (U Stamp)
MODEL:CPVD29_18J - Model:CPVSd 29
MODEL:CPVD21_18J - Model:CPVSd 21
MODEL:CPVD34_18J - Model:CPVSd 34

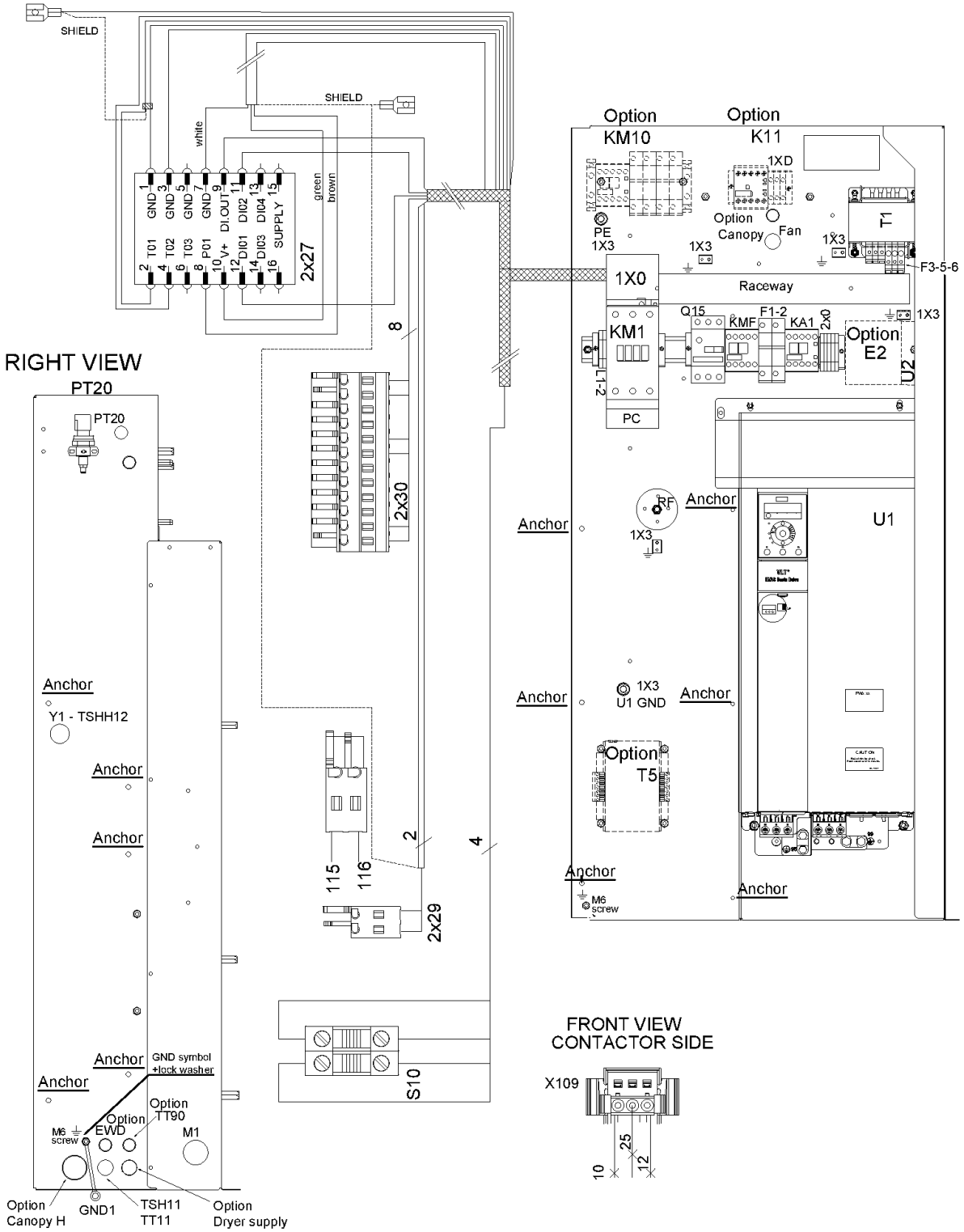
SHIELD
SHIELD
white
green
brown
GND 1
GND 3
GND 5
GND 7
DI.OUT 9
DI02 11
DI04 13
SUPPLY 15
TO1 2
TO2 4
TO3 6
PO1 8
V+ 10
DI01 12
DI03 14
16
2x27
8
2x30
2
4
115
116
2x29
S10
RIGHT VIEW
PT20
PT20
Anchor
Y1 - TSHH12
Anchor
Anchor
Anchor
GND symbol +lock washer
Anchor
Option TT90
Option EWD
M6 screw
M1
Option Canopy H
GND1
TSH11 TT11
Option Dryer supply
Option KM10
Option K11
1XD
PE 1X3
Option Canopy
Fan
1X3
1X3
T1
F3-5-6
1X0
Raceway
Q15
F1-2
KMF
KA1
2x0
1X3
KM1
Option E2
U2
L1-2
PC
PF
Anchor
1X3
U1
Anchor
1X3
U1 GND
Anchor
Anchor
Option T5
Anchor
M6 screw
Anchor
FRONT VIEW
CONTACTOR SIDE
X109
10
25
12

Ref	Part Number	Qty	Name	Validity	EL
	0694 5900 05	3	TAB	(19/12/2018 - ...)	1X3
	1088 0037 81	1	CONNECTOR	(19/12/2018 - ...)	2X27
	1088 0037 30	1	CONNECTOR 2-POLE	(19/12/2018 - ...)	2X29
	1088 0037 31	1	CONNECTOR 3-POLE	(19/12/2018 - ...)	2X30
	1088 0031 32	1	CONNECTOR	(19/12/2018 - ...)	X109
	1089 9513 89	1	EMERGENCY STOP PUSH BUTTON	(19/12/2018 - ...)	S10
	1089 9482 98	2	NC CONTACT	(19/12/2018 - ...)	S10
	1089 9482 95	1	MODULE HOLDER	(19/12/2018 - ...)	S10
	2204 1229 01	1	WIRE SUPPORT	(19/12/2018 - ...)	S10
	1089 9125 13	1	DECAL	(19/12/2018 - ...)	S10
	1088 0153 03	1	CONNECTION HEAD	(19/12/2018 - ...)	XY1
	1088 0021 92	1	CONNECTOR	(19/12/2018 - ...)	TT11-TSHH11
	1088 0021 93	4	TERMINAL PIN	(19/12/2018 - ...)	TT11-TSHH11
	1088 0021 59	1	CONNECTOR FEMALE	(19/12/2018 - ...)	PT20
	1088 0021 60	3	WIRE SEAL	(19/12/2018 - ...)	PT20
	1088 0021 61	3	TERMINAL PIN	(19/12/2018 - ...)	PT20
	2204 1039 00	1	PRESSURE SENSOR	(19/12/2018 - ...)	PT20
	2204 1407 00	1	STRAIGHT FITTING	(19/12/2018 - ...)	PT20
	0346 1000 56	1	CLAMP PIPE	(19/12/2018 - ...)	PT20
	2202 9321 00	1	CLAMP	(19/12/2018 - ...)	PT20
	6236 3126 00	11	ANCHOR	(19/12/2018 - ...)	
	2204 1758 01	1	METAL SHEET CUBICLE	(19/12/2018 - ...)	
	2204 1758 02	1	METAL SHEET CUBICLE	(19/12/2018 - ...)	
	2204 1758 03	1	DUCT	(19/12/2018 - ...)	
	2204 1758 04	1	COVER	(19/12/2018 - ...)	
	2205 0144 00	2	SERVICE DIAGRAM	(19/12/2018 - ...)	
	2205 0144 30	2	ELECTRICAL LIST	(19/12/2018 - ...)	
	2200 7723 35	1	GLOSSARY ELECTRICAL PARTS	(19/12/2018 - ...)	
	2204 1227 51	1	SINGLE LINE LABEL	(19/12/2018 - ...)	

Legend:

FREQ:60HZ - Frequency:60 Hz
MAPPR:ASME - Pressure Vessel Approval:ASME (U Stamp)
MODEL:CPVD21_18J - Model:CPVSd 21
MODEL:CPVD25_18J - Model:CPVSd 25
MODEL:CPVD29_18J - Model:CPVSd 29
MODEL:CPVD34_18J - Model:CPVSd 34
MOVOL:440V - Supply voltage:440 V

47 - Cubicle components CPVSd 21-34 - 460V/60Hz - ASME, (CRNASME - Without dryer) - Direct driven

(IDRY:N + MAPPR:CRNASME , MAPPR:ASME) + (MODEL:CPVD21_18J , MODEL:CPVD25_18J , MODEL:CPVD29_18J , MODEL:CPVD34_18J) + FREQ:60HZ + MOVOL:460V

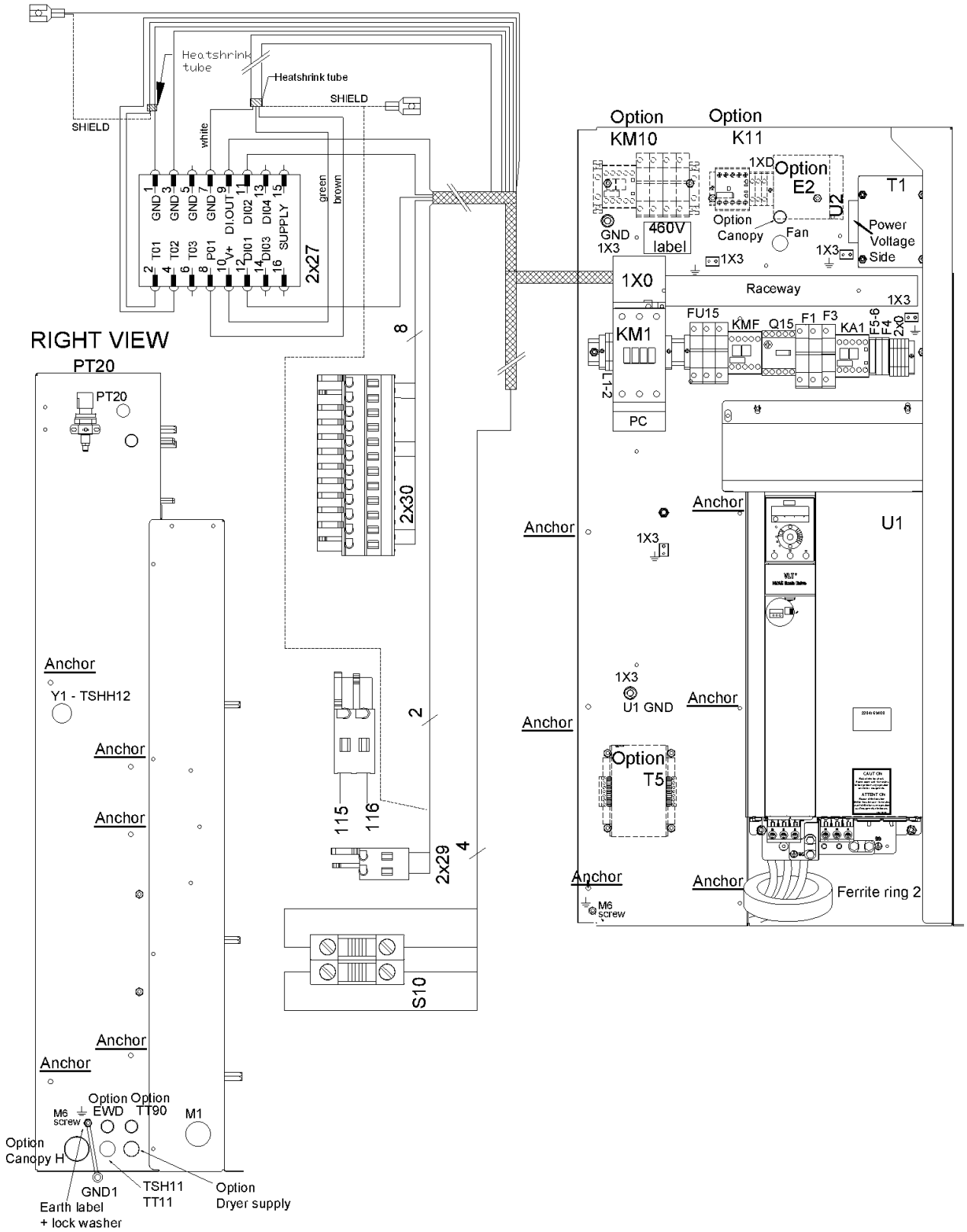

47 - Cubicle components CPVSd 21-34 - 460V/60Hz - ASME, (CRNASME - Without dryer) - Direct driven

(IDRY:N + MAPPR:CRNASME , MAPPR:ASME) + (MODEL:CPVD21_18J , MODEL:CPVD25_18J , MODEL:CPVD29_18J , MODEL:CPVD34_18J) + FREQ:60HZ + MOVOL:460V

Ref	Part Number	Qty	Name	Validity	EL
	2205 0320 01	1	CUBICLE	**(19/12/2018 - ...)** MODEL:CPVD21_18J	
	2205 0320 02	1	CUBICLE	**(19/12/2018 - ...)** MODEL:CPVD25_18J	
	2205 0320 03	1	CUBICLE	**(19/12/2018 - ...)** MODEL:CPVD29_18J	
	2205 0320 04	1	CUBICLE	**(19/12/2018 - ...)** MODEL:CPVD34_18J	
	1089 9216 14	1	TERMINAL BLOCK	**(19/12/2018 - ...)**	1X0
	1089 9496 94	1	CONTACTOR	**(19/12/2018 - ...)** MODEL:CPVD34_18J	KM1
	1089 9496 92	1	CONTACTOR	**(19/12/2018 - ...)** MODEL:CPVD21_18J , MODEL:CPVD25_18J	KM1
	1089 9496 93	1	CONTACTOR	**(19/12/2018 - ...)** MODEL:CPVD29_18J	KM1
	1089 9216 15	1	COVER	**(19/12/2018 - ...)**	PC
	1089 9438 41	1	CONTACTOR	**(19/12/2018 - ...)**	KMF
	1089 9446 37	1	OVERLOAD RELAY	**(19/12/2018 - ...)** MODEL:CPVD25_18J , MODEL:CPVD29_18J	Q15
	1089 9446 42	1	OVERLOAD RELAY	**(19/12/2018 - ...)** MODEL:CPVD34_18J	Q15
	1089 9446 36	1	OVERLOAD RELAY	**(19/12/2018 - ...)** MODEL:CPVD21_18J	Q15
	0981 2200 03	1	MOUNTING KIT	**(19/12/2018 - ...)**	
	1089 9168 27	3	FUSE	**(19/12/2018 - ...)** MODEL:CPVD34_18J	FU15
	1089 9332 39	3	FUSE	**(19/12/2018 - ...)** MODEL:CPVD25_18J , MODEL:CPVD29_18J	FU15
	1089 9168 36	3	FUSE	**(19/12/2018 - ...)** MODEL:CPVD21_18J	FU15
	1089 9594 06	1	FUSE HOLDER	**(19/12/2018 - ...)**	FU15
	1089 9421 85	1	AUX RELAY	**(19/12/2018 - ...)**	KA1
	2204 2114 00	1	CONVERTER	**(19/12/2018 - ...)** MODEL:CPVD34_18J	U1
	2204 2113 00	1	CONVERTER	**(19/12/2018 - ...)** MODEL:CPVD21_18J , MODEL:CPVD25_18J , MODEL:CPVD29_18J	U1
	2204 1633 02	1	LABEL	**(19/12/2018 - ...)**	
	2204 1634 08	1	LABEL	**(19/12/2018 - ...)**	
	2204 1368 01	1	FERRITE	**(19/12/2018 - ...)**	
	0698 5142 06	1	CABLE GLAND	**(19/12/2018 - ...)**	
	0697 9809 25	1	LOCK NUT	**(19/12/2018 - ...)**	
	0698 5141 07	1	CABLE GLAND	**(19/12/2018 - ...)**	PT20
	0697 9809 59	1	NUT LOCK	**(19/12/2018 - ...)**	PT20
	0698 5141 21	1	CABLE GLAND	**(19/12/2018 - ...)**	TT11-TSHH11
	0698 5148 84	1	MULTIPLE SEALING	**(19/12/2018 - ...)**	TT11-TSHH11
	0697 9809 53	1	LOCK NUT	**(19/12/2018 - ...)**	TT11-TSHH11
	0698 5141 17	1	CABLE GLAND	**(19/12/2018 - ...)**	Y1+TSHH12
	0697 9809 54	1	LOCK NUT	**(19/12/2018 - ...)**	Y1+TSHH12
	0698 5148 72	1	SEAL	**(19/12/2018 - ...)**	Y1+TSHH12
	0698 5141 21	1	CABLE GLAND	**(19/12/2018 - ...)**	FAN
	0697 9809 53	1	LOCK NUT	**(19/12/2018 - ...)**	FAN
	2202 9691 01	1	TRANSFORMER	**(19/12/2018 - ...)**	T1
	1089 9168 63	2	FUSE	**(19/12/2018 - ...)**	F1
	1089 9594 02	1	FUSE HOLDER	**(19/12/2018 - ...)**	F1
	1089 0591 31	1	FUSE	**(19/12/2018 - ...)**	F3
	1089 9594 01	1	FUSE HOLDER	**(19/12/2018 - ...)**	F3
	1089 9168 77	2	FUSE	**(19/12/2018 - ...)**	F5-6
	1088 1510 38	2	FUSE HOLDER	**(19/12/2018 - ...)**	F5-6
	1088 1510 39	2	END SECTION	**(19/12/2018 - ...)**	F5-6
	1089 9168 79	1	FUSE	**(19/12/2018 - ...)**	F4
	1088 1510 38	1	FUSE HOLDER	**(19/12/2018 - ...)**	F4
	1088 1510 39	1	END SECTION	**(19/12/2018 - ...)**	F4

Legend:

FREQ:60HZ - Frequency:60 Hz
MAPPR:CRNASME - Pressure Vessel Approval:CRN (based on ASME)
MODEL:CPVD29_18J - Model:CPVSd 29
IDRY:N - Integrated dryer:No
MODEL:CPVD21_18J - Model:CPVSd 21
MODEL:CPVD34_18J - Model:CPVSd 34
MAPPR:ASME - Pressure Vessel Approval:ASME (U Stamp)
MODEL:CPVD25_18J - Model:CPVSd 25
MOVOL:460V - Supply voltage:460 V

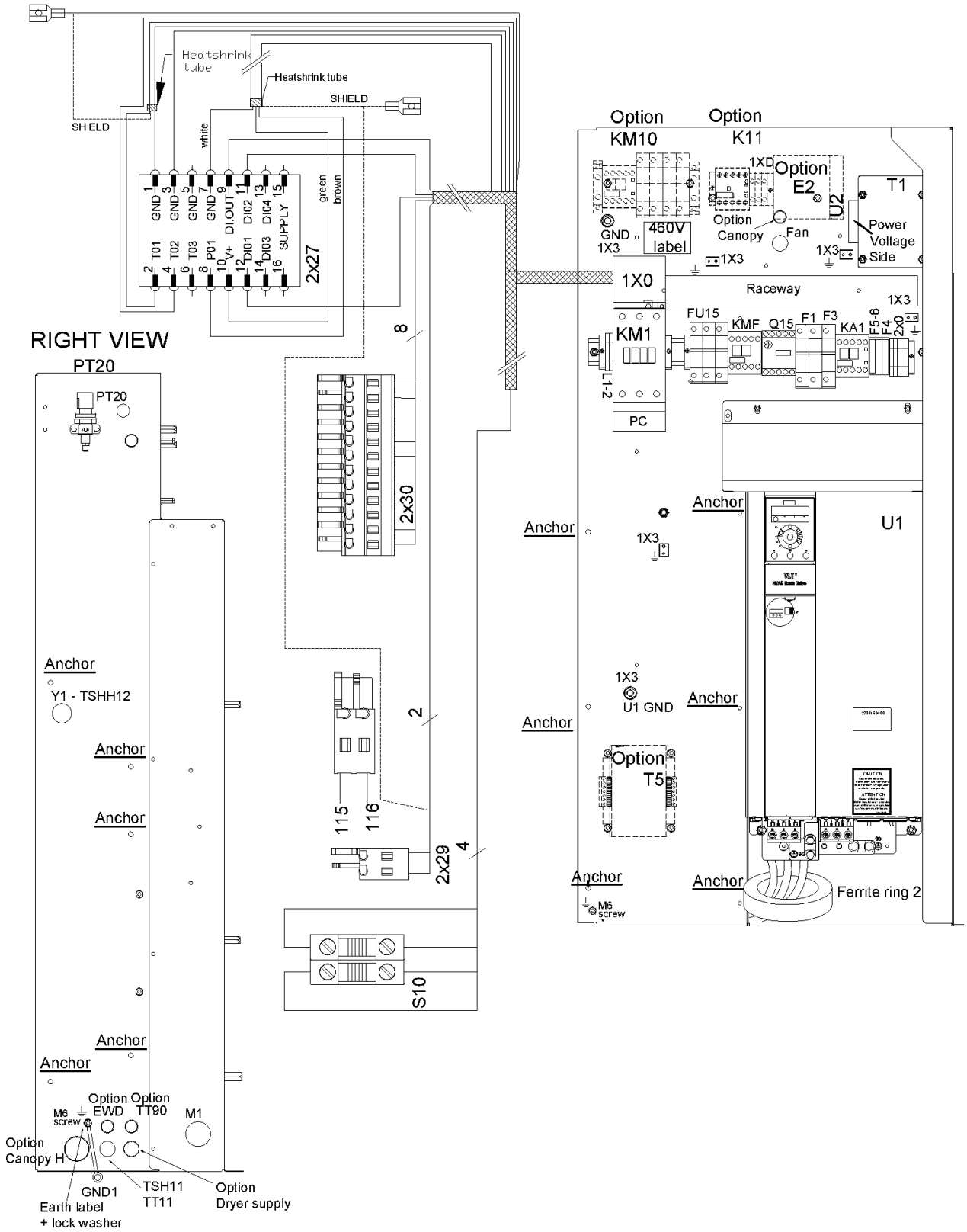
Heatshrink tube
Heatshrink tube
SHIELD
SHIELD
white
green
brown
GND 1
GND 3
GND 5
GND 7
GND 9
DI.OUT 11
DI02 13
DI04 15
SUPPLY
TO1 2
TO2 4
TO3 6
PO1 8
V+ 10
DI01 12
DI03 14
16
2x27
8
2x30
2
115
116
2x29
4
S10
RIGHT VIEW
PT20
PT20
Anchor
Y1 - TSHH12
Anchor
Anchor
Anchor
Anchor
Option EWD
Option TT90
M1
M6 screw
Option Canopy H
GND1
Earth label + lock washer
TSH11
TT11
Option Dryer supply
Option KM10
Option K11
1XD
Option E2
U2
T1
GND 1X3
460V label
Option Canopy
Fan
1X3
Power Voltage Side
1X0
Raceway
1X3
FU15
KMF
Q15
F1
F3
KA1
F5-6
F4
2x0
KM1
L1-2
PC
Anchor
Anchor
1X3
U1
1X3
U1 GND
Anchor
Anchor
Option T5
Anchor
Anchor
M6 screw
Ferrite ring 2

47 - Cubicle components CPVSd 21-34 - 460V/60Hz - ASME, (CRNASME - Without dryer) - Direct driven

(IDRY:N + MAPPR:CRNASME , MAPPR:ASME) + (MODEL:CPVD21_18J , MODEL:CPVD25_18J , MODEL:CPVD29_18J , MODEL:CPVD34_18J) + FREQ:60HZ + MOVOL:460V

Ref	Part Number	Qty	Name	Validity	EL
	~~1088 0031 81~~	4	END STOP	(19/12/2018 - ...)	2X0
	Substituted by:	1089 0577 82 - END RETAINER (quantity: 1)			
	1089 0506 09	2	EARTH-TERMINAL	(19/12/2018 - ...)	2X0
	1088 1510 13	5	TERMINAL	(19/12/2018 - ...)	2X0
	1088 1515 16	1	END PLATE	(19/12/2018 - ...)	2X0
	0694 5900 05	3	TAB	(19/12/2018 - ...)	2X0
	1088 0037 81	1	CONNECTOR	(19/12/2018 - ...)	2X27
	1088 0037 31	1	CONNECTOR 3-POLE	(19/12/2018 - ...)	X109
	1088 0031 32	1	CONNECTOR	(19/12/2018 - ...)	2X30
	1088 0037 30	1	CONNECTOR 2-POLE	(19/12/2018 - ...)	2X29
	1089 9513 89	1	EMERGENCY STOP PUSH BUTTON	(19/12/2018 - ...)	S10
	1089 9482 98	2	NC CONTACT	(19/12/2018 - ...)	S10
	1089 9482 95	1	MODULE HOLDER	(19/12/2018 - ...)	S10
	2204 1229 01	1	WIRE SUPPORT	(19/12/2018 - ...)	S10
	1089 9125 13	1	DECAL	(19/12/2018 - ...)	S10
	1088 0153 03	1	CONNECTION HEAD	(19/12/2018 - ...)	XY1
	1088 0021 92	1	CONNECTOR	(19/12/2018 - ...)	TT11
	1088 0021 93	4	TERMINAL PIN	(19/12/2018 - ...)	TT11
	1088 0021 59	1	CONNECTOR FEMALE	(19/12/2018 - ...)	PT20
	1088 0021 60	3	WIRE SEAL	(19/12/2018 - ...)	PT20
	1088 0021 61	3	TERMINAL PIN	(19/12/2018 - ...)	PT20
	2204 1039 00	1	PRESSURE SENSOR	(19/12/2018 - ...)	PT20
	2204 1407 00	1	STRAIGHT FITTING	(19/12/2018 - ...)	PT20
	0346 1000 56	1	CLAMP PIPE	(19/12/2018 - ...)	PT20
	2202 9321 00	1	CLAMP	(19/12/2018 - ...)	PT20
	6236 3126 00	10	ANCHOR	(19/12/2018 - ...)	
	2204 1758 01	1	METAL SHEET CUBICLE	(19/12/2018 - ...)	
	2204 1758 02	1	METAL SHEET CUBICLE	(19/12/2018 - ...)	
	2204 1758 03	1	DUCT	(19/12/2018 - ...)	
	2204 1758 04	1	COVER	(19/12/2018 - ...)	
	2205 0320 00	2	SERVICE DIAGRAM	(19/12/2018 - ...)	
	2205 0320 10	2	ELECTRICAL LIST	(19/12/2018 - ...)	
	2200 7723 35	1	GLOSSARY ELECTRICAL PARTS	(19/12/2018 - ...)	
	2204 2198 22	1	LABEL	(19/12/2018 - ...)	
	2204 2198 13	1	LABEL	(19/12/2018 - ...)	
	2202 2610 04	1	LABEL	(19/12/2018 - ...)	

Legend:

FREQ:60HZ - Frequency:60 Hz
IDRY:N - Integrated dryer:No
MAPPR:ASME - Pressure Vessel Approval:ASME (U Stamp)
MAPPR:CRNASME - Pressure Vessel Approval:CRN (based on ASME)
MODEL:CPVD21_18J - Model:CPVSd 21
MODEL:CPVD25_18J - Model:CPVSd 25
MODEL:CPVD29_18J - Model:CPVSd 29
MODEL:CPVD34_18J - Model:CPVSd 34
MOVOL:460V - Supply voltage:460 V

48 - Cubicle components CPVSd 21-34 - 460V/60Hz - CRNASME - With dryer - Direct driven

(MODEL:CPVD21_18J , MODEL:CPVD25_18J , MODEL:CPVD29_18J , MODEL:CPVD34_18J) + FREQ:60HZ + IDRY:Y + MAPPR:CRNASME + MOVOL:460V

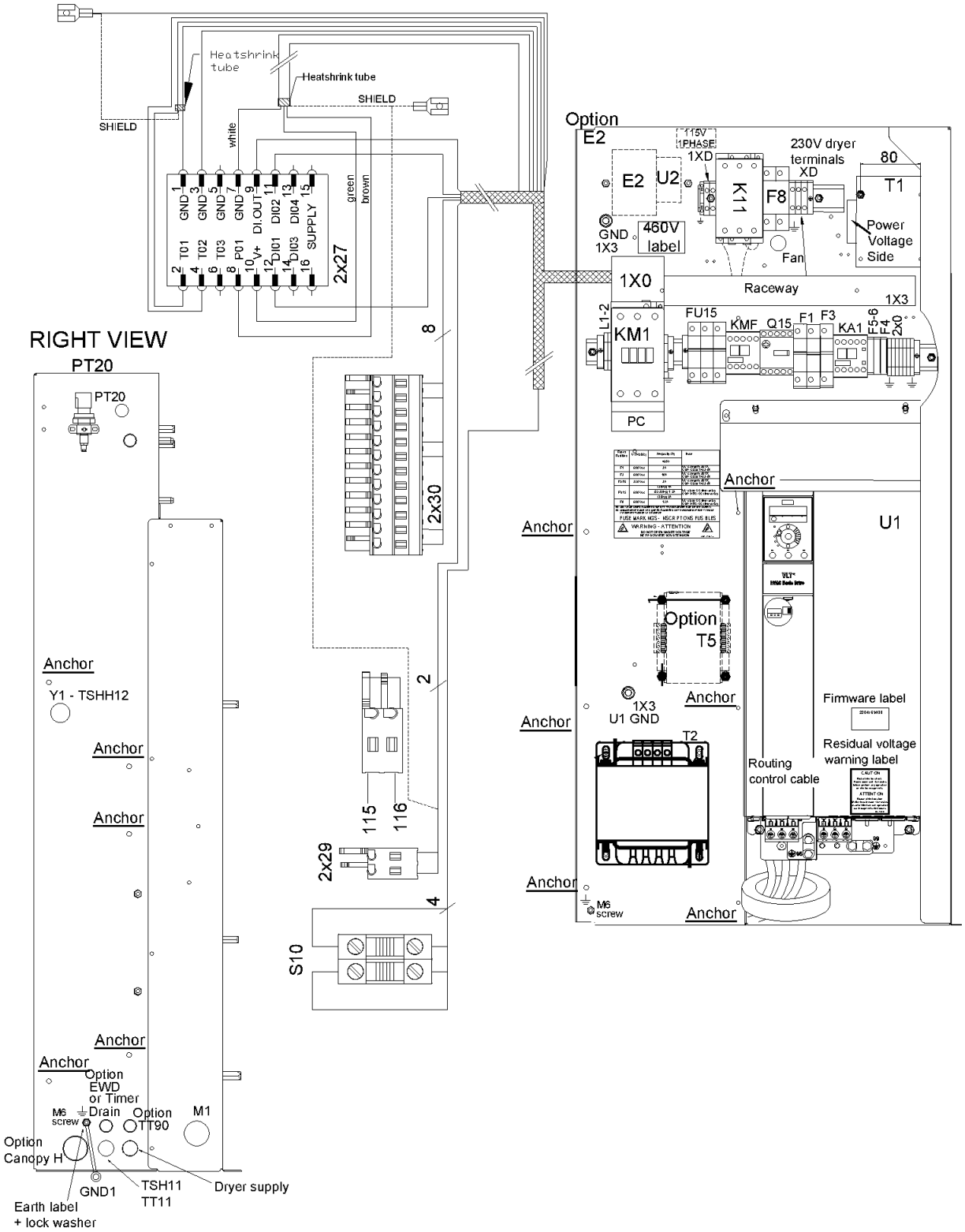

48 - Cubicle components CPVSd 21-34 - 460V/60Hz - CRNASME - With dryer - Direct driven

(MODEL:CPVD21_18J , MODEL:CPVD25_18J , MODEL:CPVD29_18J , MODEL:CPVD34_18J) + FREQ:60HZ + IDRY:Y + MAPPR:CRNASME + MOVOL:460V

Ref	Part Number	Qty	Name	Validity	EL
	2205 0320 15	1	CUBICLE	(19/12/2018 - ...) MODEL:CPVD21_18J	
	2205 0320 16	1	CUBICLE	(19/12/2018 - ...) MODEL:CPVD25_18J	
	2205 0320 17	1	CUBICLE	(19/12/2018 - ...) MODEL:CPVD29_18J	
	2205 0320 18	1	CUBICLE	(19/12/2018 - ...) MODEL:CPVD34_18J	
	1089 9216 14	1	TERMINAL BLOCK	(19/12/2018 - ...)	1X0
	1088 1510 43	2	TERMINAL	(19/12/2018 - ...)	1XD
	1088 1510 44	3	END SECTION	(19/12/2018 - ...)	1XD
	1088 1510 19	1	TERMINAL	(19/12/2018 - ...)	1XD
	~~1088 0031 81~~	2	END STOP	(19/12/2018 - ...)	1XD
	Substituted by:	1089 0577 82 - END RETAINER (quantity: 1)			
	1089 9496 93	1	CONTACTOR	(19/12/2018 - ...) MODEL:CPVD29_18J	KM1
	1089 9496 94	1	CONTACTOR	(19/12/2018 - ...) MODEL:CPVD34_18J	KM1
	1089 9496 92	1	CONTACTOR	(19/12/2018 - ...) MODEL:CPVD21_18J , MODEL:CPVD25_18J	KM1
	1089 9216 15	1	COVER	(19/12/2018 - ...)	PC
	1089 9438 41	1	CONTACTOR	(19/12/2018 - ...)	KMF
	1089 9446 37	1	OVERLOAD RELAY	(19/12/2018 - ...) MODEL:CPVD25_18J , MODEL:CPVD29_18J	Q15
	1089 9446 36	1	OVERLOAD RELAY	(19/12/2018 - ...) MODEL:CPVD21_18J	Q15
	1089 9446 42	1	OVERLOAD RELAY	(19/12/2018 - ...) MODEL:CPVD34_18J	Q15
	0981 2200 03	1	MOUNTING KIT	(19/12/2018 - ...)	
	1089 9168 27	3	FUSE	(19/12/2018 - ...) MODEL:CPVD34_18J	FU15
	1089 9168 36	3	FUSE	(19/12/2018 - ...) MODEL:CPVD21_18J	FU15
	1089 9332 39	3	FUSE	(19/12/2018 - ...) MODEL:CPVD25_18J , MODEL:CPVD29_18J	FU15
	1089 9594 06	1	FUSE HOLDER	(19/12/2018 - ...)	FU15
	1089 9421 85	1	AUX RELAY	(19/12/2018 - ...)	KA1
	1089 9438 47	1	CONTACTOR	(19/12/2018 - ...)	K11
	2204 2113 00	1	CONVERTER	(19/12/2018 - ...) MODEL:CPVD21_18J , MODEL:CPVD25_18J , MODEL:CPVD29_18J	U1
	2204 2114 00	1	CONVERTER	(19/12/2018 - ...) MODEL:CPVD34_18J	U1
	2204 1633 02	1	LABEL	(19/12/2018 - ...)	
	2204 1634 08	1	LABEL	(19/12/2018 - ...)	
	2204 1368 01	1	FERRITE	(19/12/2018 - ...)	
	0698 5142 06	1	CABLE GLAND	(19/12/2018 - ...)	
	0697 9809 25	1	LOCK NUT	(19/12/2018 - ...)	
	0698 5141 07	1	CABLE GLAND	(19/12/2018 - ...)	PT20
	0697 9809 59	1	LOCK NUT	(19/12/2018 - ...)	PT20
	0698 5141 21	1	CABLE GLAND	(19/12/2018 - ...)	TT11-TSHH11
	0698 5148 84	1	MULTIPLE SEALING	(19/12/2018 - ...)	TT11-TSHH11
	0697 9809 53	1	LOCK NUT	(19/12/2018 - ...)	TT11-TSHH11
	0698 5141 17	1	CABLE GLAND	(19/12/2018 - ...)	Y1+TSHH12
	0697 9809 54	1	LOCK NUT	(19/12/2018 - ...)	Y1+TSHH12
	0698 5148 72	1	SEAL	(19/12/2018 - ...)	Y1+TSHH12
	0698 5141 21	1	CABLE GLAND	(19/12/2018 - ...)	FAN
	0697 9809 53	1	LOCK NUT	(19/12/2018 - ...)	FAN
	0698 5141 21	1	CABLE GLAND	(19/12/2018 - ...)	DRYER
	0697 9809 53	1	LOCK NUT	(19/12/2018 - ...)	DRYER
	0698 5141 17	1	CABLE GLAND	(19/12/2018 - ...)	DRYER SUPPLY
	Electrical legend:	DRYER SUPPLY			
	0697 9809 54	1	LOCK NUT	(19/12/2018 - ...)	DRYER SUPPLY
	Electrical legend:	DRYER SUPPLY			

Legend:

FREQ:60HZ - Frequency:60 Hz
MODEL:CPVD21_18J - Model:CPVSd 21
MODEL:CPVD34_18J - Model:CPVSd 34
IDRY:Y - Integrated dryer:Yes
MODEL:CPVD25_18J - Model:CPVSd 25
MOVOL:460V - Supply voltage:460 V
MAPPR:CRNASME - Pressure Vessel Approval:CRN (based on ASME)
MODEL:CPVD29_18J - Model:CPVSd 29

48 - Cubicle components CPVSd 21-34 - 460V/60Hz - CRNASME - With dryer - Direct driven

(MODEL:CPVD21_18J , MODEL:CPVD25_18J , MODEL:CPVD29_18J , MODEL:CPVD34_18J) + FREQ:60HZ + IDRY:Y + MAPPR:CRNASME + MOVOL:460V

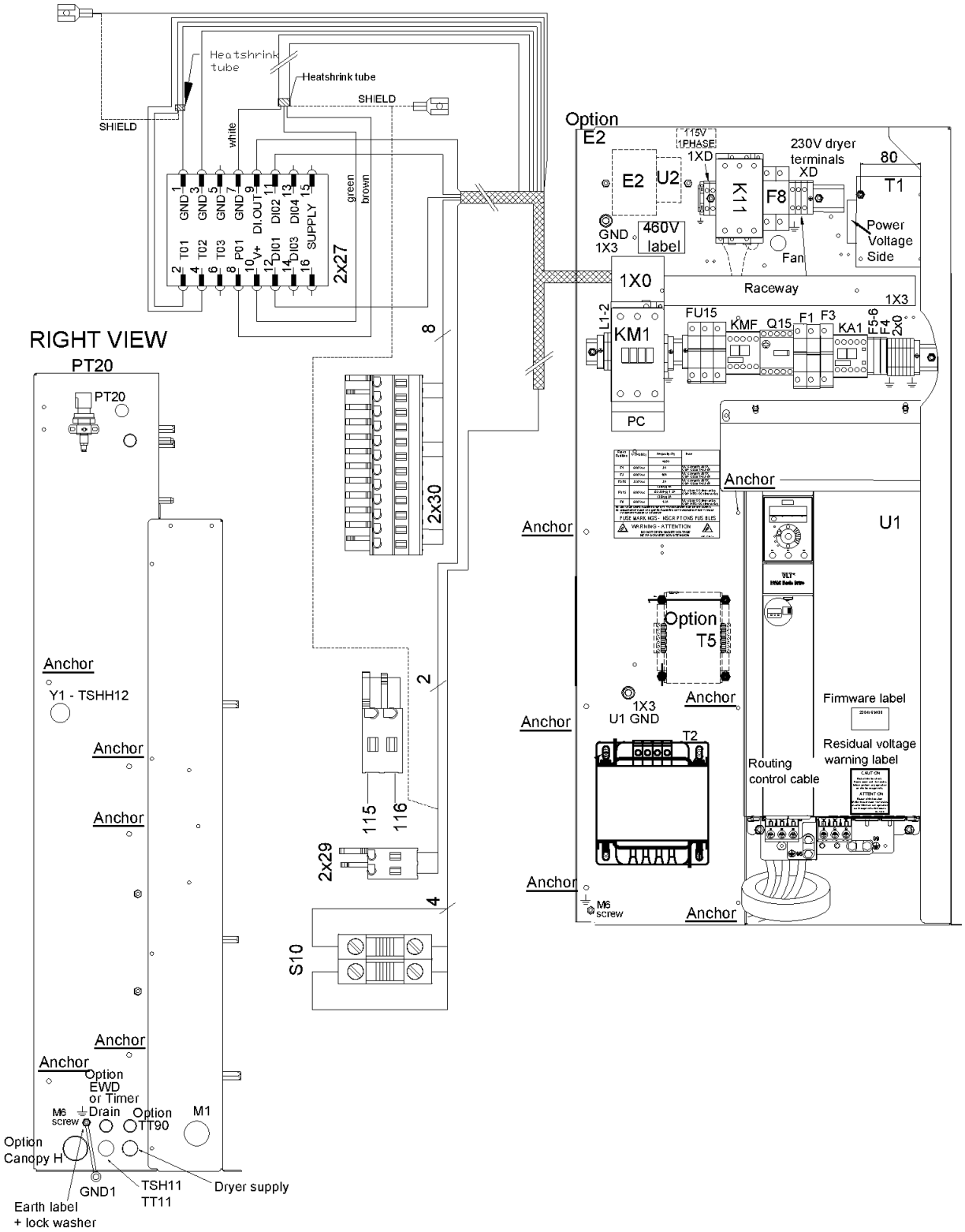

48 - Cubicle components CPVSd 21-34 - 460V/60Hz - CRNASME - With dryer - Direct driven

(MODEL:CPVD21_18J , MODEL:CPVD25_18J , MODEL:CPVD29_18J , MODEL:CPVD34_18J) + FREQ:60HZ + IDRY:Y + MAPPR:CRNASME + MOVOL:460V

Ref	Part Number	Qty	Name	Validity	EL
	2202 9691 01	1	TRANSFORMER	(19/12/2018 - ...)	T1
	2204 2167 91	1	AUTO TRANSFORMER	(19/12/2018 - ...)	T2
	1089 9168 63	2	FUSE	(19/12/2018 - ...)	F1
	1089 9594 02	1	FUSE HOLDER	(19/12/2018 - ...)	F1
	1089 0591 31	1	FUSE	(19/12/2018 - ...)	F3
	1089 9594 01	1	FUSE HOLDER	(19/12/2018 - ...)	F3
	1089 9168 77	2	FUSE	(19/12/2018 - ...)	F5-6
	1088 1510 38	2	FUSE HOLDER	(19/12/2018 - ...)	F5-6
	1088 1510 39	2	END SECTION	(19/12/2018 - ...)	F5-6
	1089 9168 79	1	FUSE	(19/12/2018 - ...)	F4
	1088 1510 38	1	FUSE HOLDER	(19/12/2018 - ...)	F4
	1088 1510 39	1	END SECTION	(19/12/2018 - ...)	F4
	1089 9168 42	1	FUSE	(19/12/2018 - ...)	F8
	1089 9594 04	1	FUSE HOLDER	(19/12/2018 - ...)	F8
	~~1088 0031 81~~	4	END STOP	(19/12/2018 - ...)	2X0
	Substituted by:	1089 0577 82 - END RETAINER (quantity: 1)			
	1089 0506 09	2	EARTH-TERMINAL	(19/12/2018 - ...)	2X0
	1088 1510 13	5	TERMINAL	(19/12/2018 - ...)	2X0
	1088 1515 16	1	END PLATE	(19/12/2018 - ...)	2X0
	0694 5900 05	3	TAB	(19/12/2018 - ...)	
	1088 0037 81	1	CONNECTOR	(19/12/2018 - ...)	2X27
	1088 0037 31	1	CONNECTOR 3-POLE	(19/12/2018 - ...)	X109
	1088 0031 32	1	CONNECTOR	(19/12/2018 - ...)	2X30
	1088 0037 30	1	CONNECTOR 2-POLE	(19/12/2018 - ...)	2X29
	1089 9513 89	1	EMERGENCY STOP PUSH BUTTON	(19/12/2018 - ...)	S10
	1089 9482 98	2	NC CONTACT	(19/12/2018 - ...)	S10
	1089 9482 95	1	MODULE HOLDER	(19/12/2018 - ...)	S10
	2204 1229 01	1	WIRE SUPPORT	(19/12/2018 - ...)	S10
	1089 9125 13	1	DECAL	(19/12/2018 - ...)	S10
	1088 0153 03	1	CONNECTION HEAD	(19/12/2018 - ...)	Y1
	1088 0021 92	1	CONNECTOR	(19/12/2018 - ...)	TT11
	1088 0021 93	4	TERMINAL PIN	(19/12/2018 - ...)	TT11
	1088 0021 59	1	CONNECTOR FEMALE	(19/12/2018 - ...)	PT20
	1088 0021 60	3	WIRE SEAL	(19/12/2018 - ...)	PT20
	1088 0021 61	3	TERMINAL PIN	(19/12/2018 - ...)	PT20
	2204 1039 00	1	PRESSURE SENSOR	(19/12/2018 - ...)	PT20
	2204 1407 00	1	STRAIGHT FITTING	(19/12/2018 - ...)	PT20
	0346 1000 56	1	CLAMP PIPE	(19/12/2018 - ...)	PT20
	2202 9321 00	1	CLAMP	(19/12/2018 - ...)	PT20
	6236 3126 00	10	ANCHOR	(19/12/2018 - ...)	
	2204 1758 01	1	SHEET METAL CUBICLE	(19/12/2018 - ...)	
	2204 1758 02	1	SHEET METAL CUBICLE	(19/12/2018 - ...)	
	2204 1758 03	1	DUCT	(19/12/2018 - ...)	
	2204 1758 04	1	COVER	(19/12/2018 - ...)	
	2205 0320 00	2	SERVICE DIAGRAM	(19/12/2018 - ...)	
	2205 0320 20	2	ELECTRICAL LIST	(19/12/2018 - ...)	
	2200 7723 35	1	GLOSSARY ELECTRICAL PARTS	(19/12/2018 - ...)	
	2204 2198 22	1	LABEL	(19/12/2018 - ...)	
	2204 2198 13	1	LABEL	(19/12/2018 - ...)	

Legend:

FREQ:60HZ - Frequency:60 Hz
MODEL:CPVD21_18J - Model:CPVSd 21
MODEL:CPVD34_18J - Model:CPVSd 34
IDRY:Y - Integrated dryer:Yes
MODEL:CPVD25_18J - Model:CPVSd 25
MOVOL:460V - Supply voltage:460 V
MAPPR:CRNASME - Pressure Vessel Approval:CRN (based on ASME)
MODEL:CPVD29_18J - Model:CPVSd 29

48 - Cubicle components CPVSd 21-34 - 460V/60Hz - CRNASME - With dryer - Direct driven

(MODEL:CPVD21_18J , MODEL:CPVD25_18J , MODEL:CPVD29_18J , MODEL:CPVD34_18J) + FREQ:60HZ + IDRY:Y + MAPPR:CRNASME + MOVOL:460V

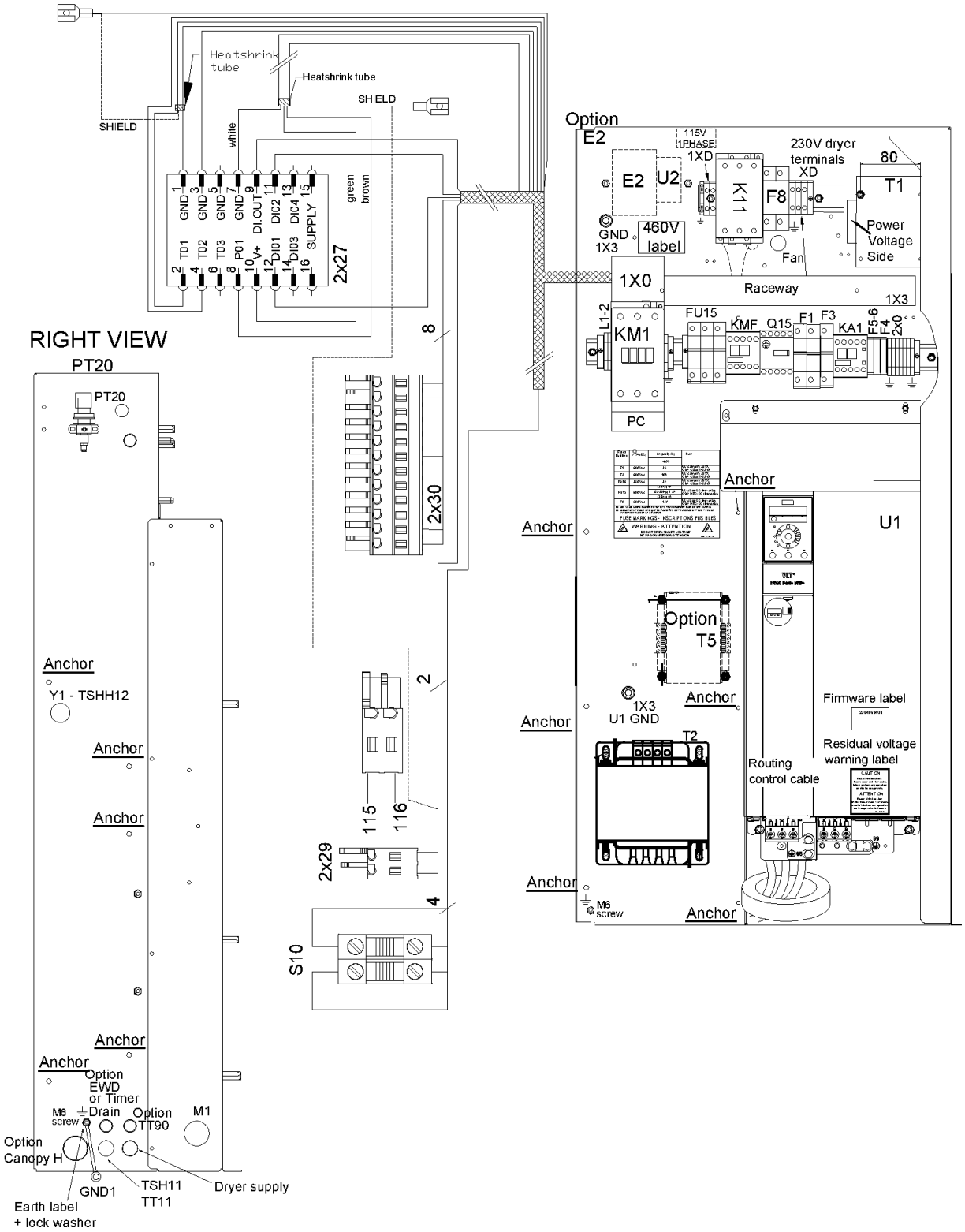

48 - Cubicle components CPVSd 21-34 - 460V/60Hz - CRNASME - With dryer - Direct driven

(MODEL:CPVD21_18J , MODEL:CPVD25_18J , MODEL:CPVD29_18J , MODEL:CPVD34_18J) + FREQ:60HZ + IDRY:Y + MAPPR:CRNASME + MOVOL:460V

Ref	Part Number	Qty	Name	Validity	EL
	2202 2610 04	1	LABEL	(19/12/2018 - ...)	
	2202 2610 01	1	LABEL	(19/12/2018 - ...)	
	2204 2155 04	1	LABEL	(19/12/2018 - ...)	

Legend:

FREQ:60HZ - Frequency:60 Hz
IDRY:Y - Integrated dryer:Yes
MAPPR:CRNASME - Pressure Vessel Approval:CRN (based on ASME)
MODEL:CPVD21_18J - Model:CPVSd 21
MODEL:CPVD25_18J - Model:CPVSd 25
MODEL:CPVD29_18J - Model:CPVSd 29
MODEL:CPVD34_18J - Model:CPVSd 34
MOVOL:460V - Supply voltage:460 V

49.1 - Internal CPBg 20-34 - Without dryer

(MODEL:CPBG20_18J , MODEL:CPBG25_18J , MODEL:CPBG29_18J , MODEL:CPBG34_18J) + IDRY:N

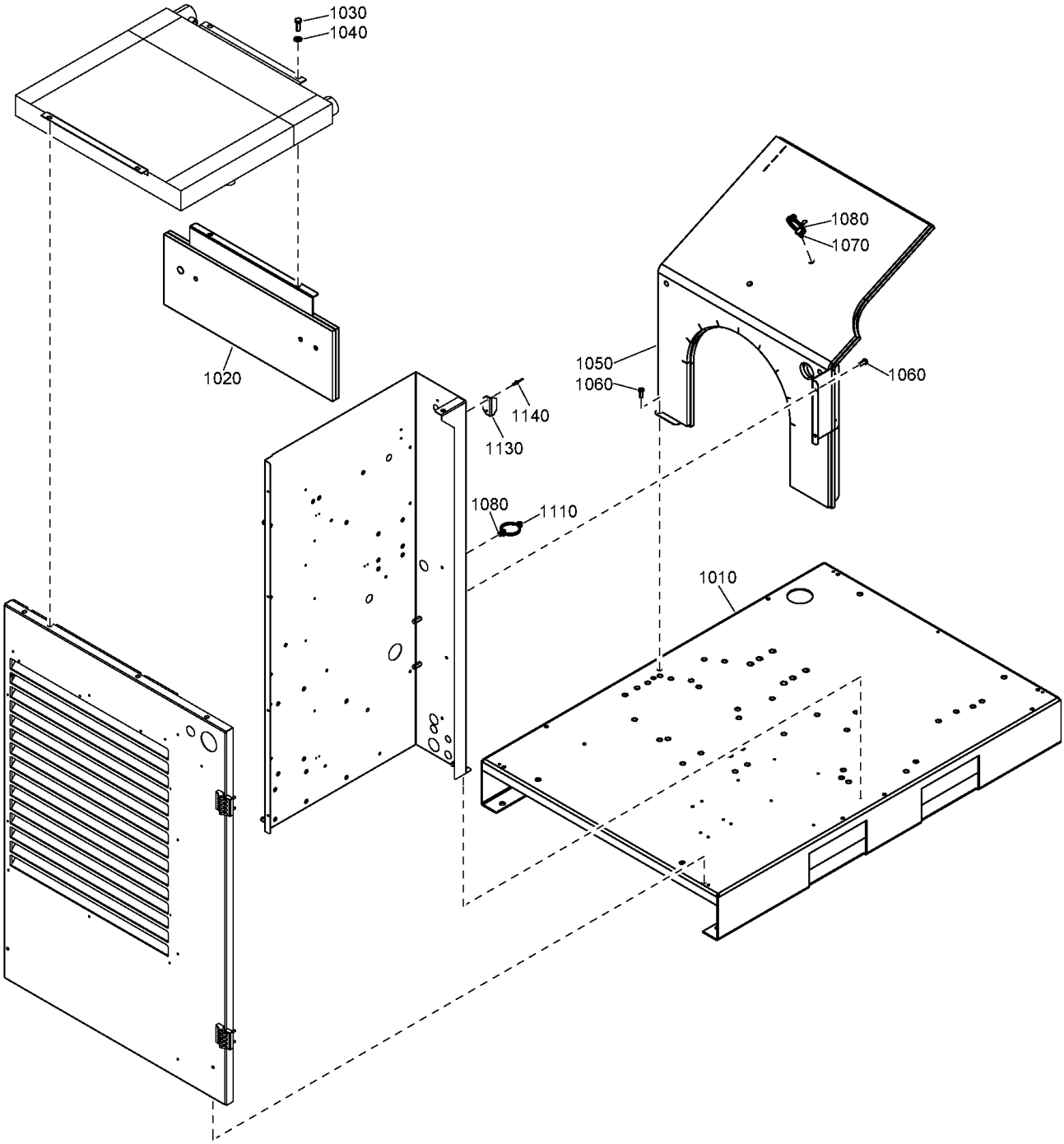

Ref	Part Number	Qty	Name	Validity
1010	2204 1447 96	1	FRAME	(21/08/2018 - ...)
1020	2204 1755 00	1	DEFLECTOR BAFFLE	(21/08/2018 - ...)
1030	0147 1325 03	2	HEXAGON HEAD SCREW	(21/08/2018 - ...)
1040	2202 9045 01	2	WASHER	(21/08/2018 - ...)
1050	2204 1757 00	1	BAFFLE MOTOR	(21/08/2018 - ...)
1060	0215 0003 91	3	SCREW	(21/08/2018 - ...)
1070	6236 3126 00	3	ANCHOR	(21/08/2018 - ...)
1080	0348 0101 20	10	CABLE TIE	(21/08/2018 - ...)
1110	6236 3126 00	3	ANCHOR	(21/08/2018 - ...)
1130	6275 6068 10	1	BRACKET	(21/08/2018 - ...)
1140	0129 3270 46	2	BLIND RIVET	(21/08/2018 - ...)

Legend:

IDRY:N - Integrated dryer:No
MODEL:CPBG20_18J - Model:CPBg 20
MODEL:CPBG25_18J - Model:CPBg 25
MODEL:CPBG29_18J - Model:CPBg 29
MODEL:CPBG34_18J - Model:CPBg 34

49.2 - Internal CPVSd 21-34 - Without dryer

(MODEL:CPVD21_18J , MODEL:CPVD25_18J , MODEL:CPVD29_18J , MODEL:CPVD34_18J) + IDRY:N

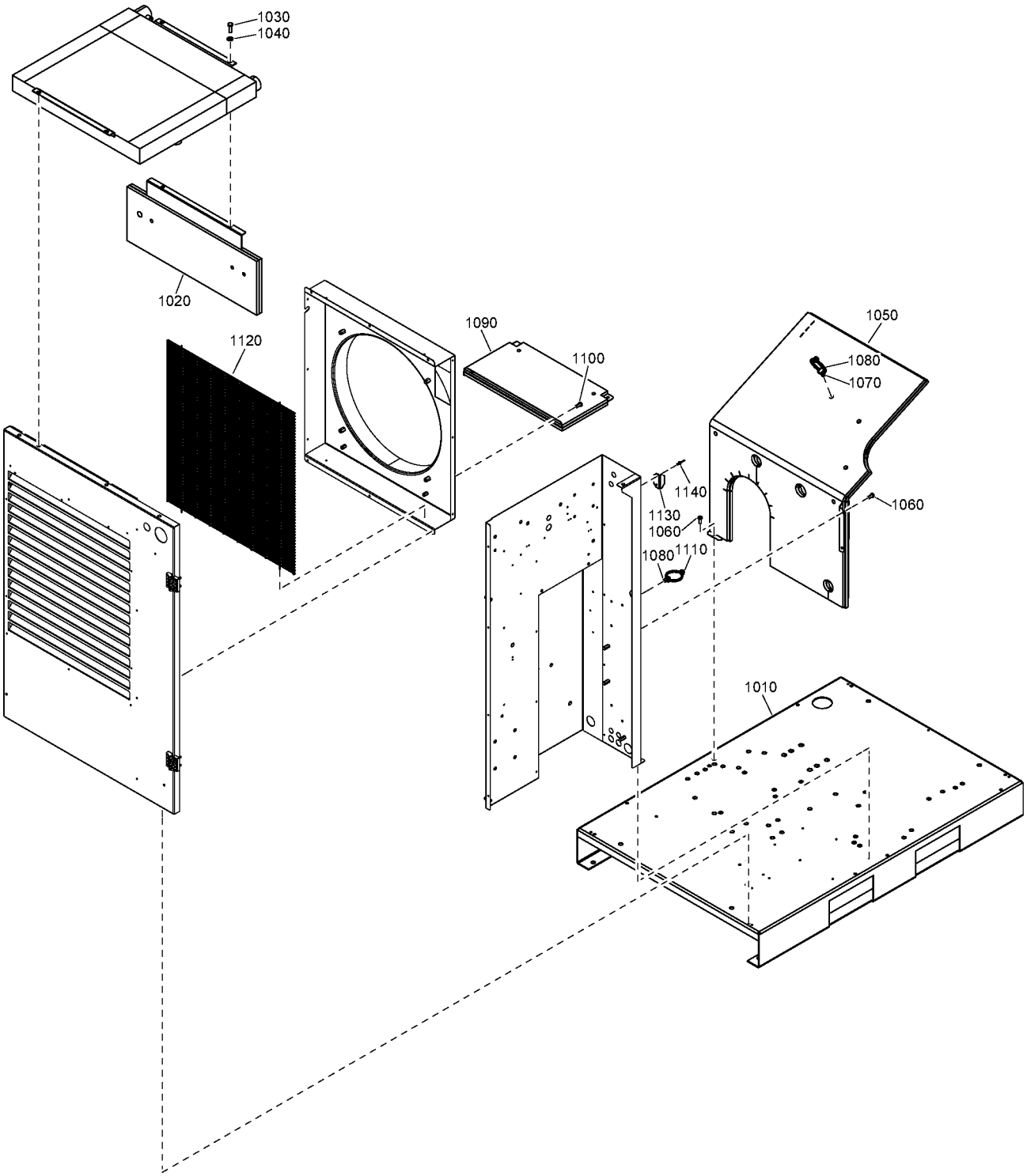

Ref	Part Number	Qty	Name	Validity
1010	2204 1447 96	1	FRAME	(22/08/2018 - ...)
1020	2204 1755 00	1	DEFLECTOR BAFFLE	(22/08/2018 - ...)
1030	0147 1325 03	2	HEXAGON HEAD SCREW	(22/08/2018 - ...)
1040	2202 9045 01	2	WASHER	(22/08/2018 - ...)
1050	2204 1764 00	1	BAFFLE MOTOR	(22/08/2018 - ...)
1060	0215 0003 91	3	SCREW	(22/08/2018 - ...)
1070	6236 3126 00	3	ANCHOR	(22/08/2018 - ...)
1080	0348 0101 20	10	CABLE TIE	(22/08/2018 - ...)
1090	2204 1778 00	1	BAFFLE MOTOR	(22/08/2018 - ...)
1100	0215 0003 91	3	SCREW	(22/08/2018 - ...)
1110	6236 3126 00	3	ANCHOR	(22/08/2018 - ...)
1120	2204 1759 00	1	GUARD	(22/08/2018 - ...)
1130	6275 6068 10	1	BRACKET	(22/08/2018 - ...)
1140	0129 3270 46	2	BLIND RIVET	(22/08/2018 - ...)

Legend:

IDRY:N - Integrated dryer:No
MODEL:CPVD21_18J - Model:CPVSd 21
MODEL:CPVD25_18J - Model:CPVSd 25
MODEL:CPVD29_18J - Model:CPVSd 29
MODEL:CPVD34_18J - Model:CPVSd 34

49.3 - Internal CPBg 20-34 - With dryer

(MODEL:CPBG20_18J , MODEL:CPBG25_18J , MODEL:CPBG29_18J , MODEL:CPBG34_18J) + IDRY:Y

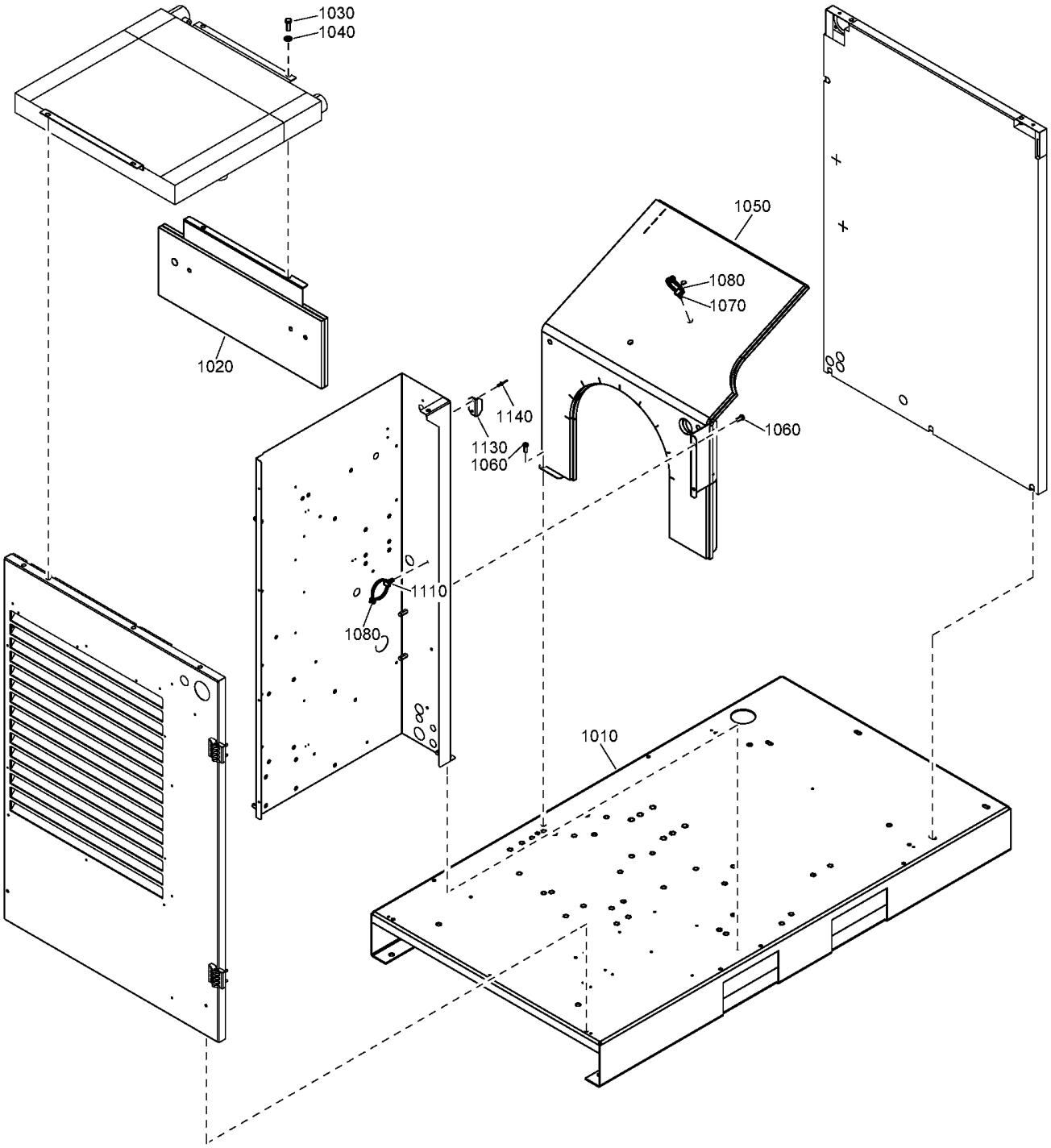

Ref	Part Number	Qty	Name	Validity
1010	2204 1765 16	1	FRAME	**(21/08/2018 - ...)** MDVAR:CU
1010	2204 1765 96	1	FRAME	**(21/08/2018 - ...)** MDVAR:FMOUNTED
1020	2204 1755 00	1	DEFLECTOR BAFFLE	**(21/08/2018 - ...)**
1030	0147 1325 03	2	HEXAGON HEAD SCREW	**(21/08/2018 - ...)**
1040	2202 9045 01	2	WASHER	**(21/08/2018 - ...)**
1050	2204 1757 00	1	BAFFLE MOTOR	**(21/08/2018 - ...)**
1060	0215 0003 91	3	SCREW	**(21/08/2018 - ...)**
1070	6236 3126 00	3	ANCHOR	**(21/08/2018 - ...)**
1080	0348 0101 20	10	CABLE TIE	**(21/08/2018 - ...)**
1110	6236 3126 00	3	ANCHOR	**(21/08/2018 - ...)**
1130	6275 6068 10	1	BRACKET	**(21/08/2018 - ...)**
1140	0129 3270 46	2	BLIND RIVET	**(21/08/2018 - ...)**

Legend:

IDRY:Y - Integrated dryer:Yes
MDVAR:CU - Variant:Receiver mounted
MDVAR:FMOUNTED - Variant:Floor Mounted
MODEL:CPBG20_18J - Model:CPBg 20
MODEL:CPBG25_18J - Model:CPBg 25
MODEL:CPBG29_18J - Model:CPBg 29
MODEL:CPBG34_18J - Model:CPBg 34

49.4 - Internal CPVSd 21-34 - With dryer

(MODEL:CPVD21_18J , MODEL:CPVD25_18J , MODEL:CPVD29_18J , MODEL:CPVD34_18J) + IDRY:Y

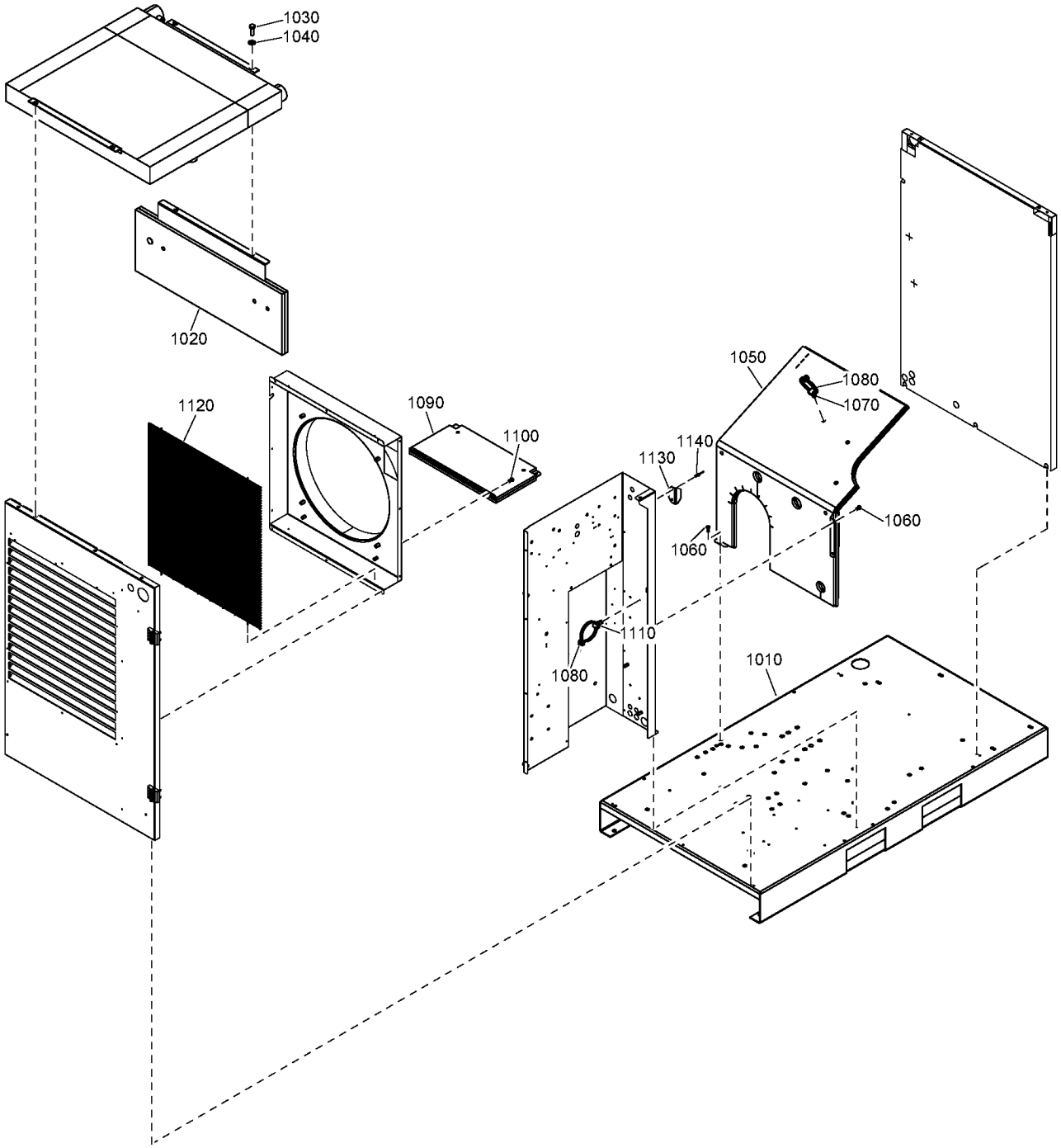

Ref	Part Number	Qty	Name	Validity
1010	2204 1765 16	1	FRAME	**(22/08/2018 - ...)** MDVAR:CU
1010	2204 1765 96	1	FRAME	**(22/08/2018 - ...)** MDVAR:FMOUNTED
1020	2204 1755 00	1	DEFLECTOR BAFFLE	**(22/08/2018 - ...)**
1030	0147 1325 03	2	HEXAGON HEAD SCREW	**(22/08/2018 - ...)**
1040	2202 9045 01	2	WASHER	**(22/08/2018 - ...)**
1050	2204 1764 00	1	BAFFLE MOTOR	**(22/08/2018 - ...)**
1060	0215 0003 91	3	SCREW	**(22/08/2018 - ...)**
1070	6236 3126 00	3	ANCHOR	**(22/08/2018 - ...)**
1080	0348 0101 20	10	CABLE TIE	**(22/08/2018 - ...)**
1090	2204 1778 00	1	BAFFLE MOTOR	**(22/08/2018 - ...)**
1100	0215 0003 91	3	SCREW	**(22/08/2018 - ...)**
1110	6236 3126 00	3	ANCHOR	**(22/08/2018 - ...)**
1120	2204 1759 00	1	GUARD	**(22/08/2018 - ...)**
1130	6275 6068 10	1	BRACKET	**(22/08/2018 - ...)**
1140	0129 3270 46	2	BLIND RIVET	**(22/08/2018 - ...)**

Legend:

IDRY:Y - Integrated dryer:Yes
MDVAR:CU - Variant:Receiver mounted
MDVAR:FMOUNTED - Variant:Floor Mounted
MODEL:CPVD21_18J - Model:CPVSd 21
MODEL:CPVD25_18J - Model:CPVSd 25
MODEL:CPVD29_18J - Model:CPVSd 29
MODEL:CPVD34_18J - Model:CPVSd 34

49.5 - External CPBg 20-34 - Without dryer

(MODEL:CPBG20_18J , MODEL:CPBG25_18J , MODEL:CPBG29_18J , MODEL:CPBG34_18J) + IDRY:N

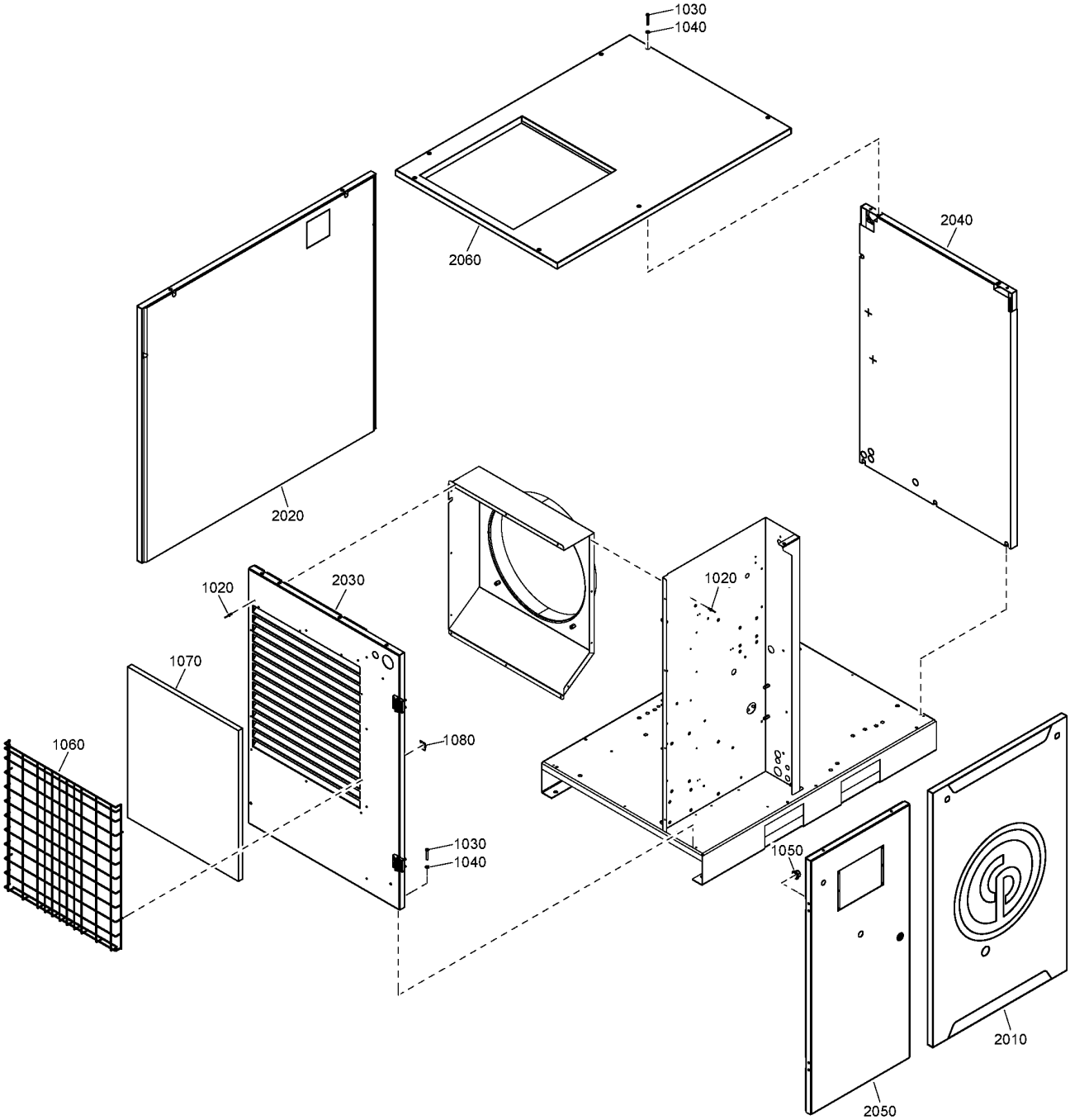

Ref	Part Number	Qty	Name	Validity
1020	0129 3270 46	9	BLIND RIVET	(21/08/2018 - ...)
1030	0216 1957 75	9	SCREW	(17/01/2019 - ...)
1040	2202 9392 01	9	WASHER	(21/08/2018 - ...)
1050	0291 1185 28	4	NUT	(21/08/2018 - ...)
1060	2204 1213 00	1	GRID	(21/08/2018 - ...)
1070		1	PRE-FILTER	(21/08/2018 - ...)
	Service kits:	2200 9035 41 - KIT 8000H - 30-35HP - GEAR DRIVEN - WITHOUT DRYER 2200 9035 39 - KIT 8000H - 20-25HP - GEAR DRIVEN - WITHOUT DRYER 2200 9035 04 - KIT 4000H - 30-35HP - GEAR DRIVEN - WITHOUT DRYER 2200 9035 02 - KIT 4000H - 20-25HP - GEAR DRIVEN - WITHOUT DRYER		
1080	2200 7302 47	4	PLATE	(21/08/2018 - ...)
2010	2204 1540 97	1	FRONT PANEL	(21/08/2018 - ...)
2020	2204 1450 17	1	BACK PANEL	(21/08/2018 - ...)
2030	2204 1531 16	1	LEFT PANEL	(21/08/2018 - ...)
2040	2204 1535 17	1	RIGHT PANEL	(21/08/2018 - ...)
2050	2204 1528 16	1	CUBICLE DOOR	(21/08/2018 - ...)
2060	2204 1449 16	1	ROOF	(21/08/2018 - ...)

Legend:

IDRY:N - Integrated dryer:No
MODEL:CPBG20_18J - Model:CPBg 20
MODEL:CPBG25_18J - Model:CPBg 25
MODEL:CPBG29_18J - Model:CPBg 29
MODEL:CPBG34_18J - Model:CPBg 34

49.6 - External CPVSd 21-34 - Without dryer

(MODEL:CPVD21_18J , MODEL:CPVD25_18J , MODEL:CPVD29_18J , MODEL:CPVD34_18J) + IDRY:N

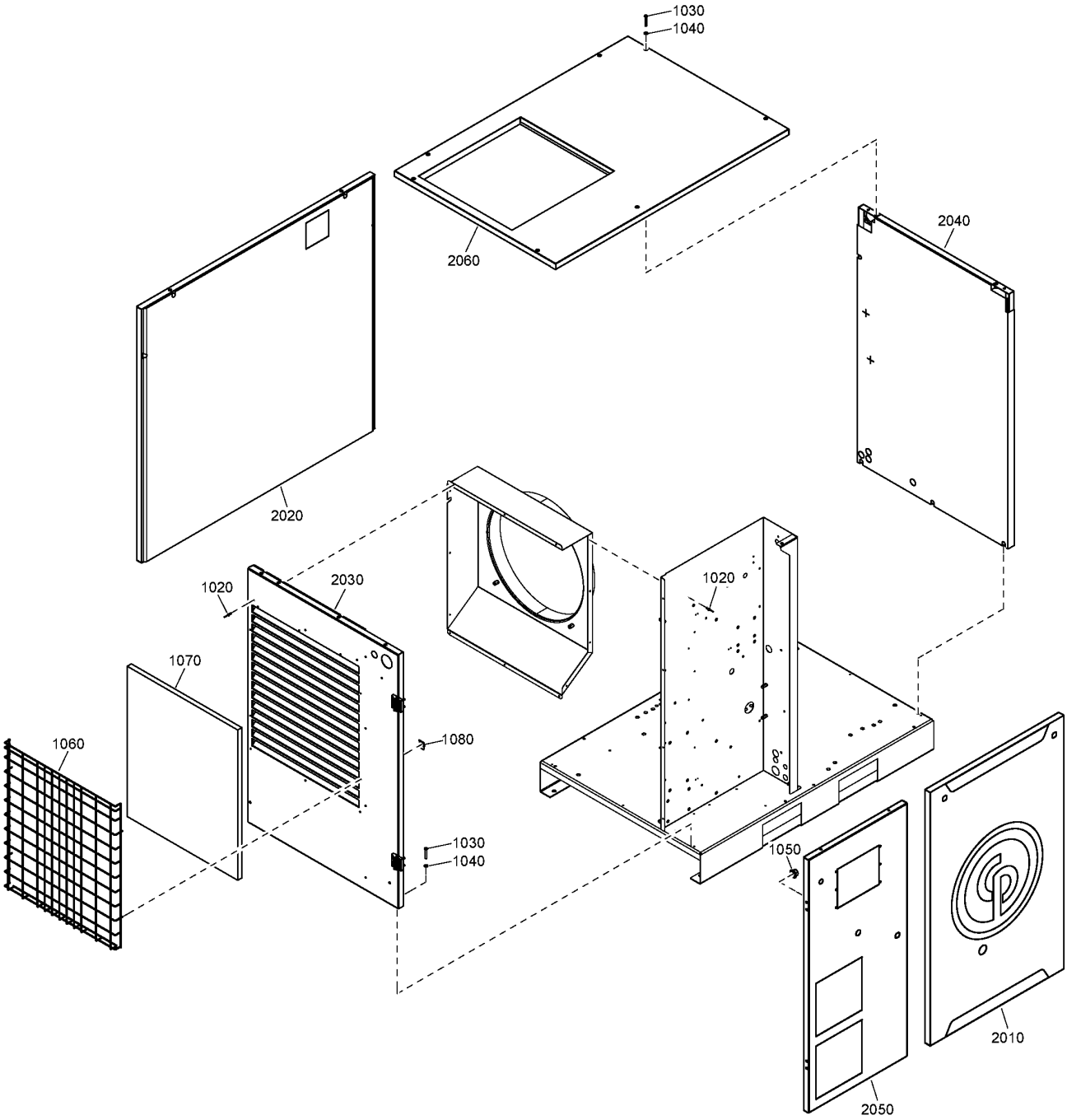

Ref	Part Number	Qty	Name	Validity
1020	0129 3270 46	9	BLIND RIVET	(22/08/2018 - ...)
1030	0216 1957 75	9	SCREW	(17/01/2019 - ...)
1040	2202 9392 01	9	WASHER	(22/08/2018 - ...)
1050	0291 1185 28	4	NUT	(22/08/2018 - ...)
1060	2204 1213 00	1	GRID	(22/08/2018 - ...)
1070		1	PRE-FILTER	(22/08/2018 - ...)
	Service kits:	2200 9035 45 - KIT 8000H - 30-35HP - DIRECT DRIVEN - WITHOUT DRYER 2200 9035 43 - KIT 8000H - 20-25HP - DIRECT DRIVEN - WITHOUT DRYER 2200 9035 08 - KIT 4000H - 30-35HP - DIRECT DRIVEN - WITHOUT DRYER 2200 9035 06 - KIT 4000H - 20-25HP - DIRECT DRIVEN - WITHOUT DRYER		
1080	2200 7302 47	4	PLATE	(22/08/2018 - ...)
2010	2204 1540 97	1	FRONT PANEL	(22/08/2018 - ...)
2020	2204 1450 17	1	BACK PANEL	(22/08/2018 - ...)
2030	2204 1531 16	1	LEFT PANEL	(22/08/2018 - ...)
2040	2204 1535 17	1	RIGHT PANEL	(22/08/2018 - ...)
2050	2204 1529 16	1	CUBICLE DOOR	(22/08/2018 - ...)
2060	2204 1449 16	1	ROOF	(22/08/2018 - ...)

Legend:

IDRY:N - Integrated dryer:No
MODEL:CPVD21_18J - Model:CPVSd 21
MODEL:CPVD25_18J - Model:CPVSd 25
MODEL:CPVD29_18J - Model:CPVSd 29
MODEL:CPVD34_18J - Model:CPVSd 34

49.7 - External CPBg 20-34 - With dryer

(MODEL:CPBG20_18J , MODEL:CPBG25_18J , MODEL:CPBG29_18J , MODEL:CPBG34_18J) + IDRY:Y

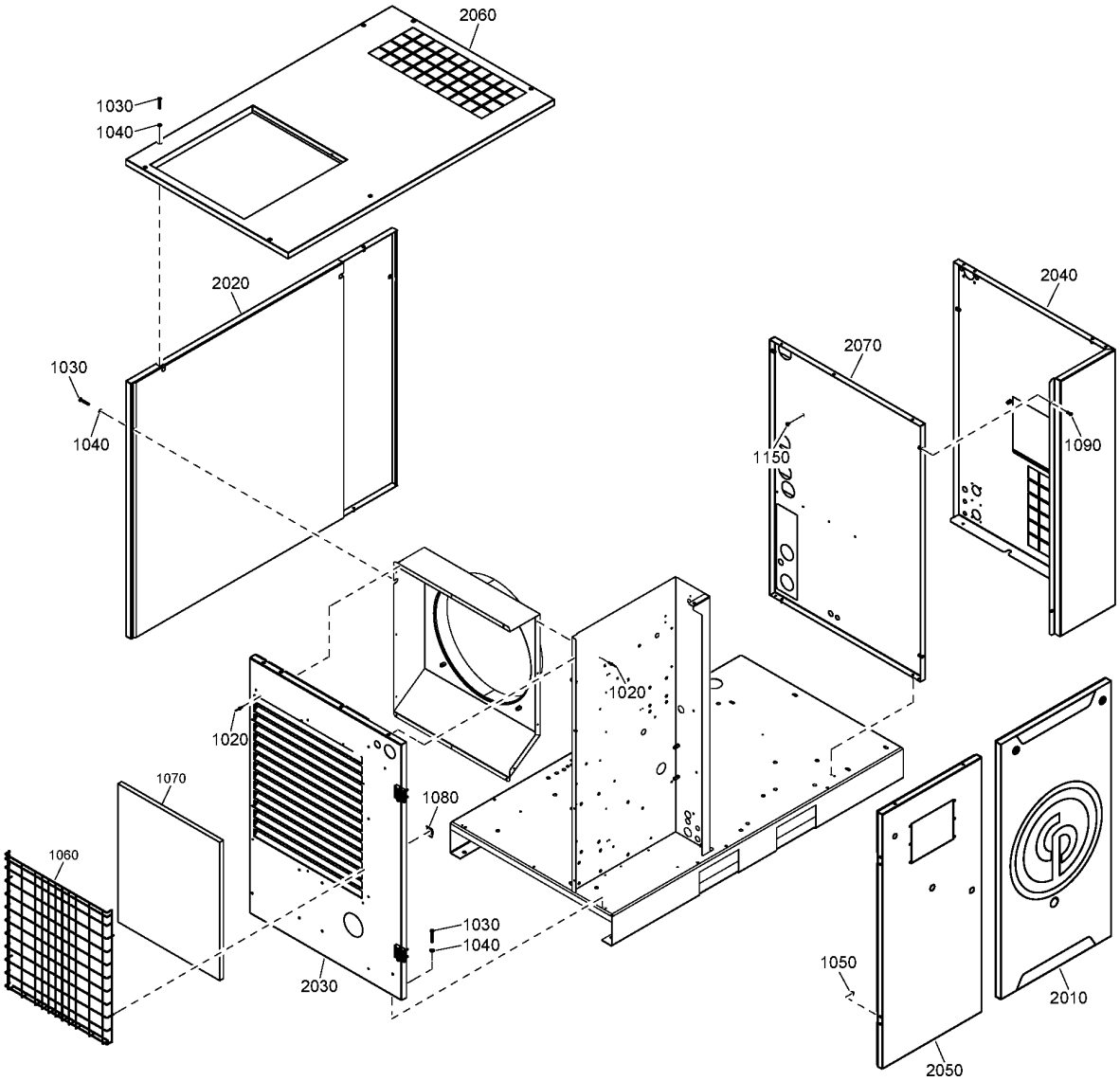

Ref	Part Number	Qty	Name	Validity
1020	0129 3270 46	9	BLIND RIVET	(21/08/2018 - ...)
1030	0216 1957 75	10	SCREW	(17/01/2019 - ...)
1040	2202 9392 01	10	WASHER	(21/08/2018 - ...)
1050	0291 1185 28	4	NUT	(21/08/2018 - ...)
1060	2204 1213 00	1	GRID	(21/08/2018 - ...)
1070		1	PRE-FILTER	(21/08/2018 - ...)
	Service kits:	2200 9035 42 - KIT 8000H - 30-35HP - GEAR DRIVEN - WITH DRYER 2200 9035 40 - KIT 8000H - 20-25HP - GEAR DRIVEN - WITH DRYER 2200 9035 05 - KIT 4000H - 30-35HP - GEAR DRIVEN - WITH DRYER 2200 9035 03 - KIT 4000H - 20-25HP - GEAR DRIVEN - WITH DRYER		
1080	2200 7302 47	4	PLATE	(21/08/2018 - ...)
1090	0215 0003 91	2	SCREW	(08/10/2018 - ...)
1150	2200 7199 53	1	SCREW	(08/10/2018 - ...)
2010	2204 1530 97	1	FRONT PANEL	(21/08/2018 - ...)
2020	2204 1747 17	1	BACK PANEL	(21/08/2018 - ...)
2030	2204 1531 16	1	LEFT PANEL	(21/08/2018 - ...)
2040	2204 1539 17	1	RIGHT PANEL	(21/08/2018 - ...)
2050	2204 1528 16	1	CUBICLE DOOR	(21/08/2018 - ...)
2060	2204 1536 16	1	ROOF	(21/08/2018 - ...)
2070	2204 1773 00	1	DRYER BAFFLE	(08/10/2018 - ...)

Legend:

IDRY:Y - Integrated dryer:Yes
MODEL:CPBG20_18J - Model:CPBg 20
MODEL:CPBG25_18J - Model:CPBg 25
MODEL:CPBG29_18J - Model:CPBg 29
MODEL:CPBG34_18J - Model:CPBg 34

49.8 - External CPVSd 21-34 - With dryer

(MODEL:CPVD21_18J , MODEL:CPVD25_18J , MODEL:CPVD29_18J , MODEL:CPVD34_18J) + IDRY:Y

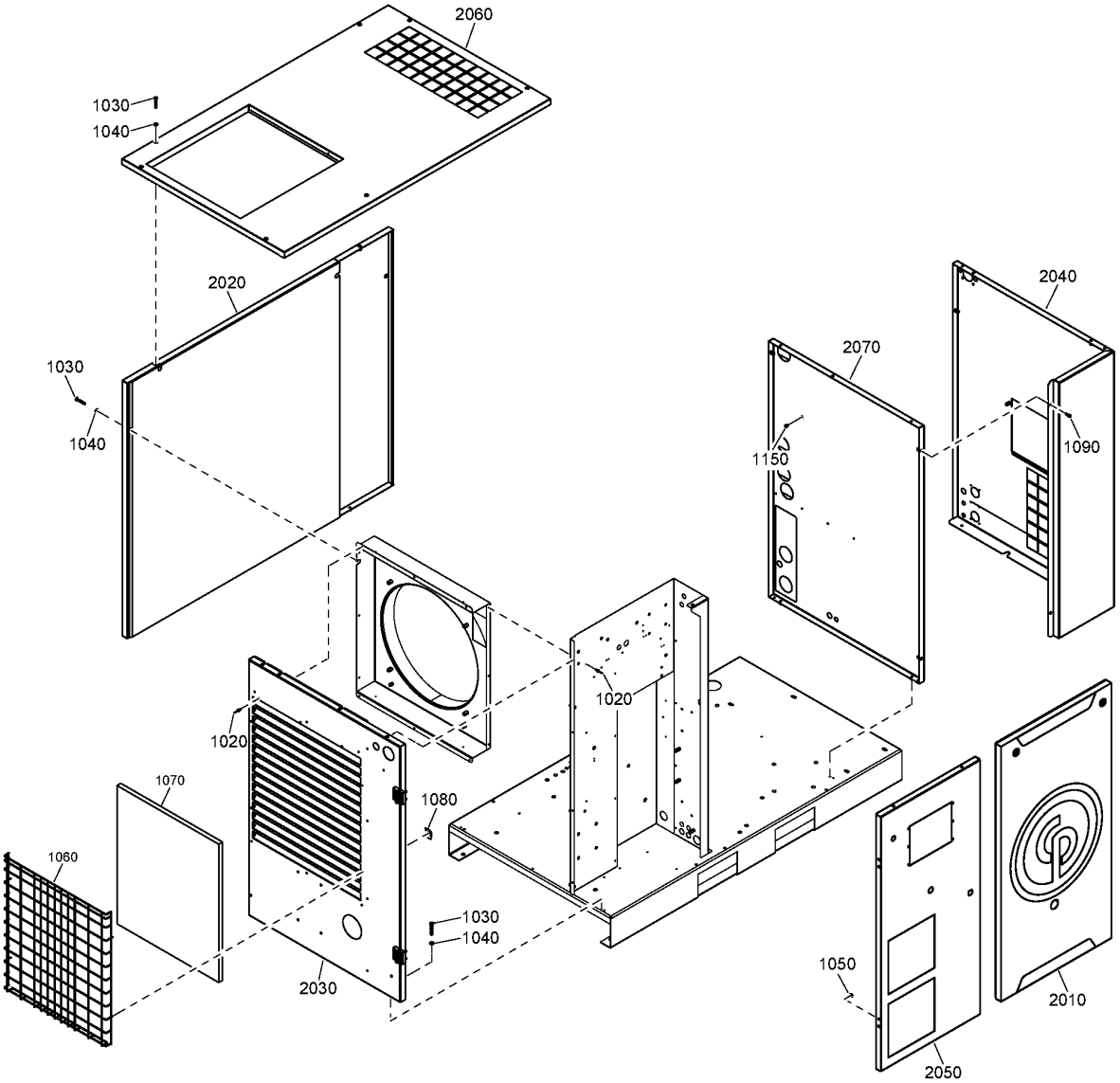

Ref	Part Number	Qty	Name	Validity
1020	0129 3270 46	9	BLIND RIVET	(22/08/2018 - ...)
1030	0216 1957 75	10	SCREW	(17/01/2019 - ...)
1040	2202 9392 01	10	WASHER	(22/08/2018 - ...)
1050	0291 1185 28	4	NUT	(22/08/2018 - ...)
1060	2204 1213 00	1	GRID	(22/08/2018 - ...)
1070		1	PRE-FILTER	(22/08/2018 - ...)
	Service kits:	2200 9035 46 - KIT 8000H - 30-35HP - DIRECT DRIVEN - WITH DRYER 2200 9035 44 - KIT 8000H - 20-25HP - DIRECT DRIVEN - WITH DRYER 2200 9035 09 - KIT 4000H - 30-35HP - DIRECT DRIVEN - WITH DRYER 2200 9035 07 - KIT 4000H - 20-25HP - DIRECT DRIVEN - WITH DRYER		
1080	2200 7302 47	4	PLATE	(22/08/2018 - ...)
1090	0215 0003 91	2	SCREW	(08/10/2018 - ...)
1150	2200 7199 53	1	SCREW	(08/10/2018 - ...)
2010	2204 1530 97	1	FRONT PANEL	(22/08/2018 - ...)
2020	2204 1747 17	1	BACK PANEL	(22/08/2018 - ...)
2030	2204 1531 16	1	LEFT PANEL	(22/08/2018 - ...)
2040	2204 1539 17	1	RIGHT PANEL	(22/08/2018 - ...)
2050	2204 1529 16	1	CUBICLE DOOR	(22/08/2018 - ...)
2060	2204 1536 16	1	ROOF	(22/08/2018 - ...)
2070	2204 1773 00	1	DRYER BAFFLE	(08/10/2018 - ...)

Legend:

IDRY:Y - Integrated dryer:Yes
MODEL:CPVD21_18J - Model:CPVSd 21
MODEL:CPVD25_18J - Model:CPVSd 25
MODEL:CPVD29_18J - Model:CPVSd 29
MODEL:CPVD34_18J - Model:CPVSd 34

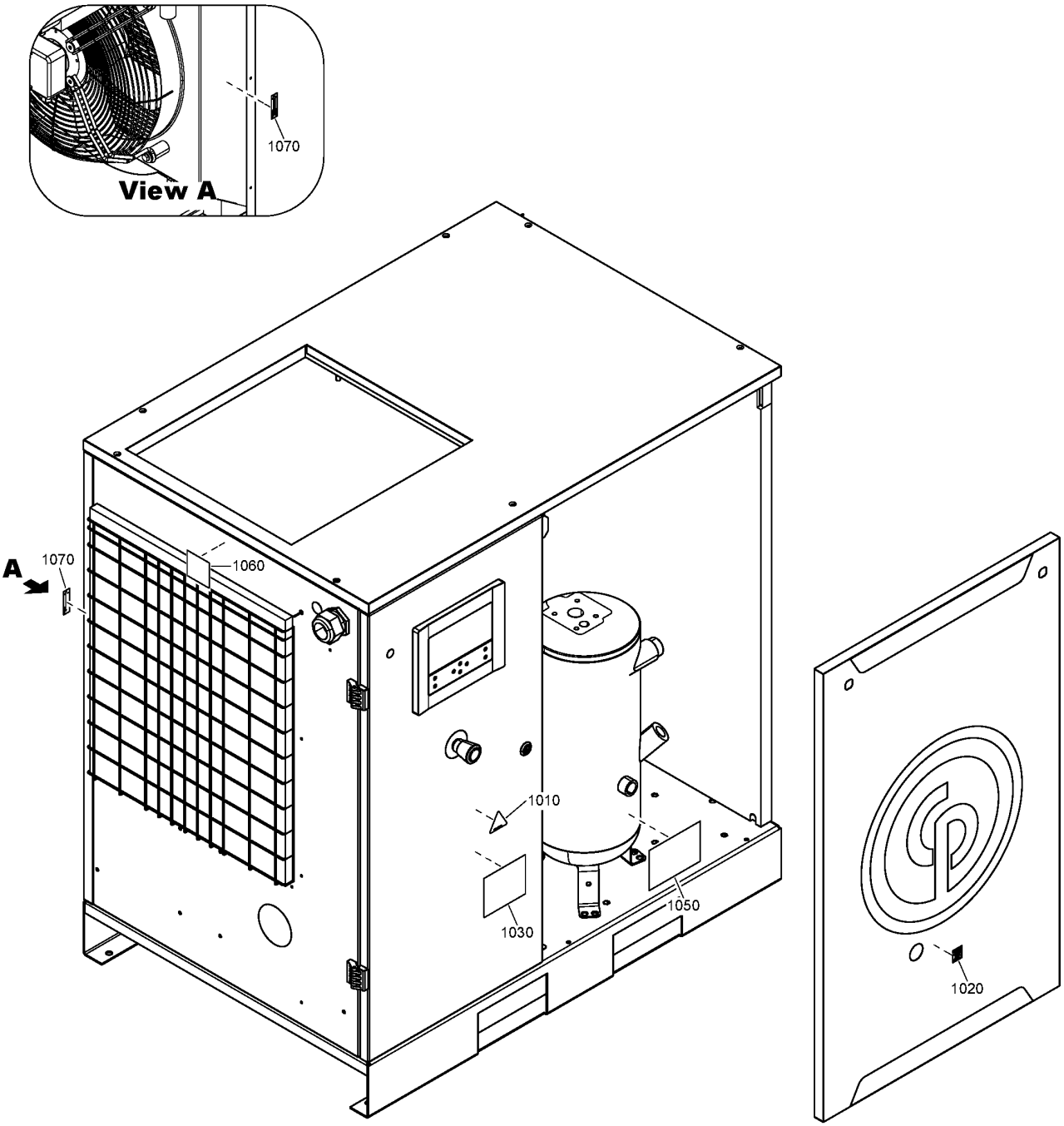
1070
View A
A
1070
1060
1010
1030
1050
1020

Ref	Part Number	Qty	Name	Validity
1010	1088 1001 02	1	WARNING MARK	(21/08/2018 - ...)
1020	2202 2512 93	1	LABEL OIL LEVEL	(21/08/2018 - ...)
1030	2202 2607 91	1	WARNING DECAL	(21/08/2018 - ...)
1050	2202 2042 89	1	LABEL	(21/08/2018 - ...)
1060	2202 2606 22	1	LABEL	(21/08/2018 - ...)
1070	2200 6101 09	1	LABEL	(17/01/2019 - ...)

Legend:
EAPPR:IEC - Electrical approval:IEC

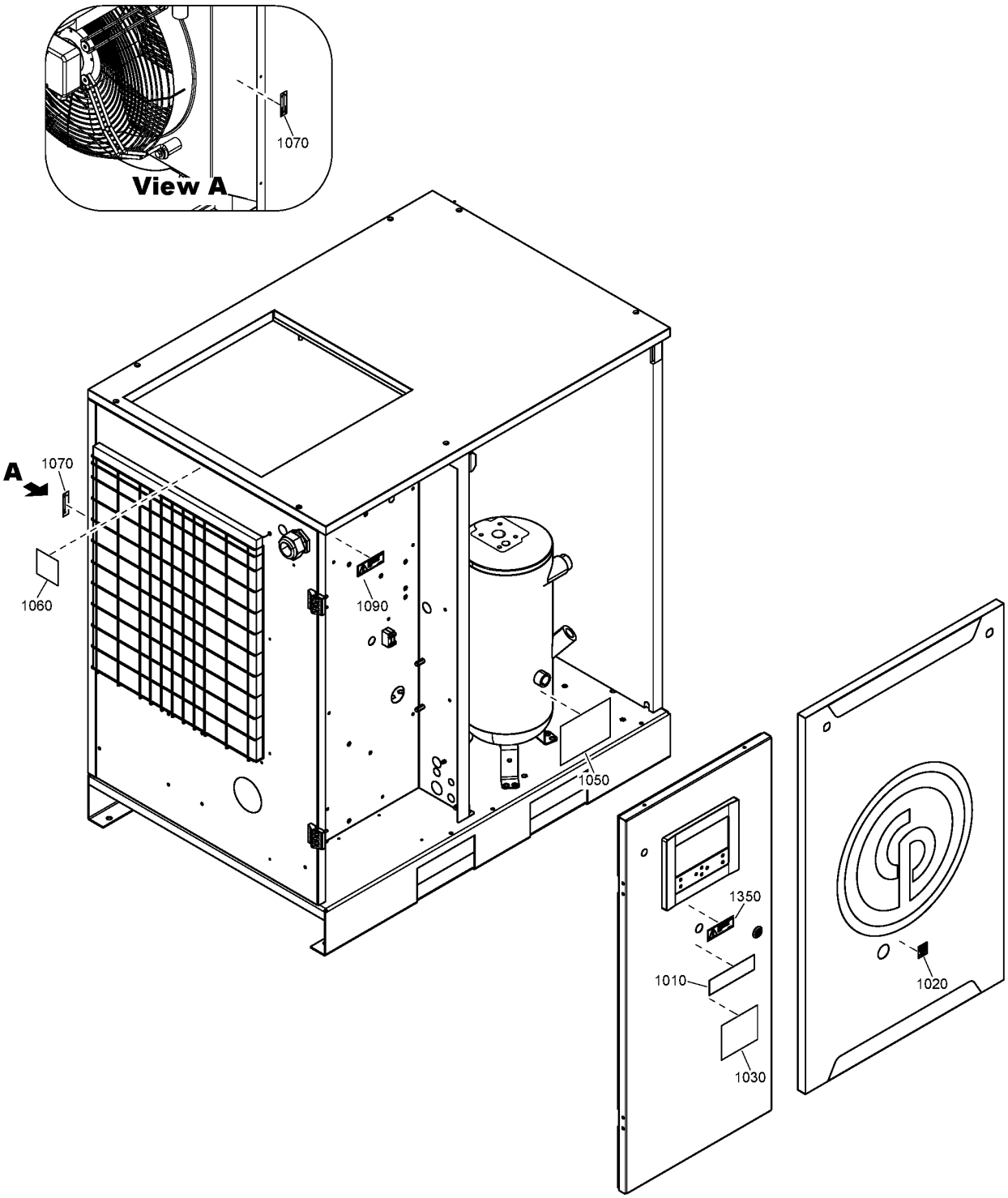
1070
View A
A
1070
1060
1090
1050
1350
1010
1030
1020

Ref	Part Number	Qty	Name	Validity
1010	2203 0541 10	1	LABEL CAUTION: ELEC. HAZARD	(21/08/2018 - ...)
1020	2202 2512 93	1	LABEL OIL LEVEL	(21/08/2018 - ...)
1030	2202 2607 91	1	WARNING DECAL	(21/08/2018 - ...)
1050	2202 2042 89	1	LABEL	(21/08/2018 - ...)
1060	2202 2606 22	1	LABEL	(21/08/2018 - ...)
1070	2200 6101 09	1	LABEL	(17/01/2019 - ...)
1090		1	LABEL UL OPEN	(21/08/2018 - ...)
1350	2204 2199 00	1	DECAL	(22/10/2018 - ...)

Legend:
EAPPR:ULCUL - Electrical approval:UL/cUL

52 - Branding CPBg 20-34 - Without dryer

(MODEL:CPBG20_18J , MODEL:CPBG25_18J , MODEL:CPBG29_18J , MODEL:CPBG34_18J) + IDRY:N

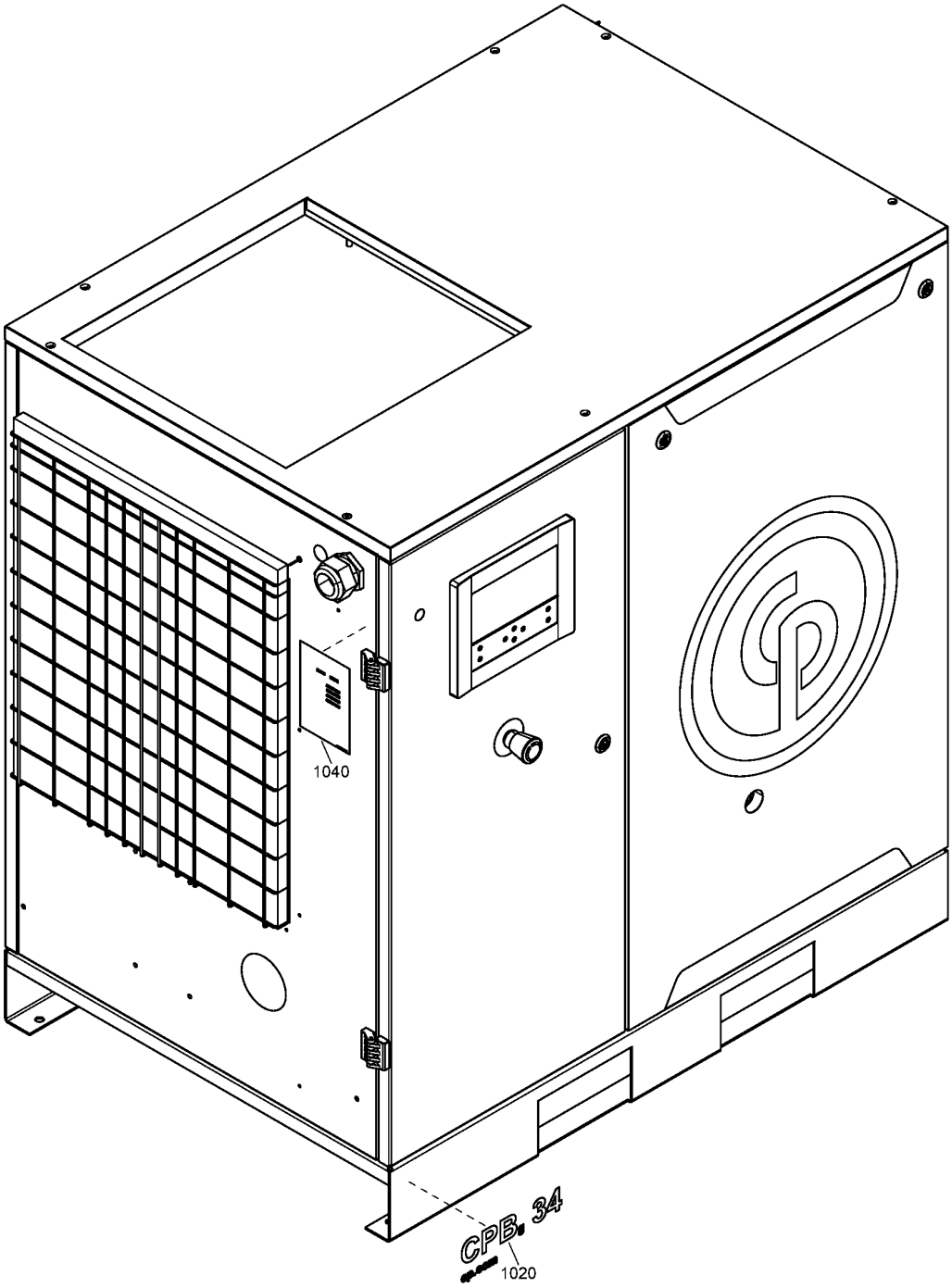

Ref	Part Number	Qty	Name	Validity
1020	2204 1304 27	1	DECAL	**(21/08/2018 - ...)** MODEL:CPBG34_18J
1020	2204 1304 25	1	DECAL	**(21/08/2018 - ...)** MODEL:CPBG25_18J
1020	2204 1304 26	1	DECAL	**(21/08/2018 - ...)** MODEL:CPBG29_18J
1020	2204 1304 24	1	DECAL	**(21/08/2018 - ...)** MODEL:CPBG20_18J
1040	2204 2175 05	1	LABEL	**(21/08/2018 - ...)** MODEL:CPBG20_18J , MODEL:CPBG25_18J
1040	2204 2175 07	1	LABEL	**(21/08/2018 - ...)** MODEL:CPBG29_18J , MODEL:CPBG34_18J

Legend:

IDRY:N - Integrated dryer:No
MODEL:CPBG20_18J - Model:CPBg 20
MODEL:CPBG25_18J - Model:CPBg 25
MODEL:CPBG29_18J - Model:CPBg 29
MODEL:CPBG34_18J - Model:CPBg 34

53 - Branding CPBg 20-34 - With dryer

(MODEL:CPBG20_18J , MODEL:CPBG25_18J , MODEL:CPBG29_18J , MODEL:CPBG34_18J) + IDRY:Y

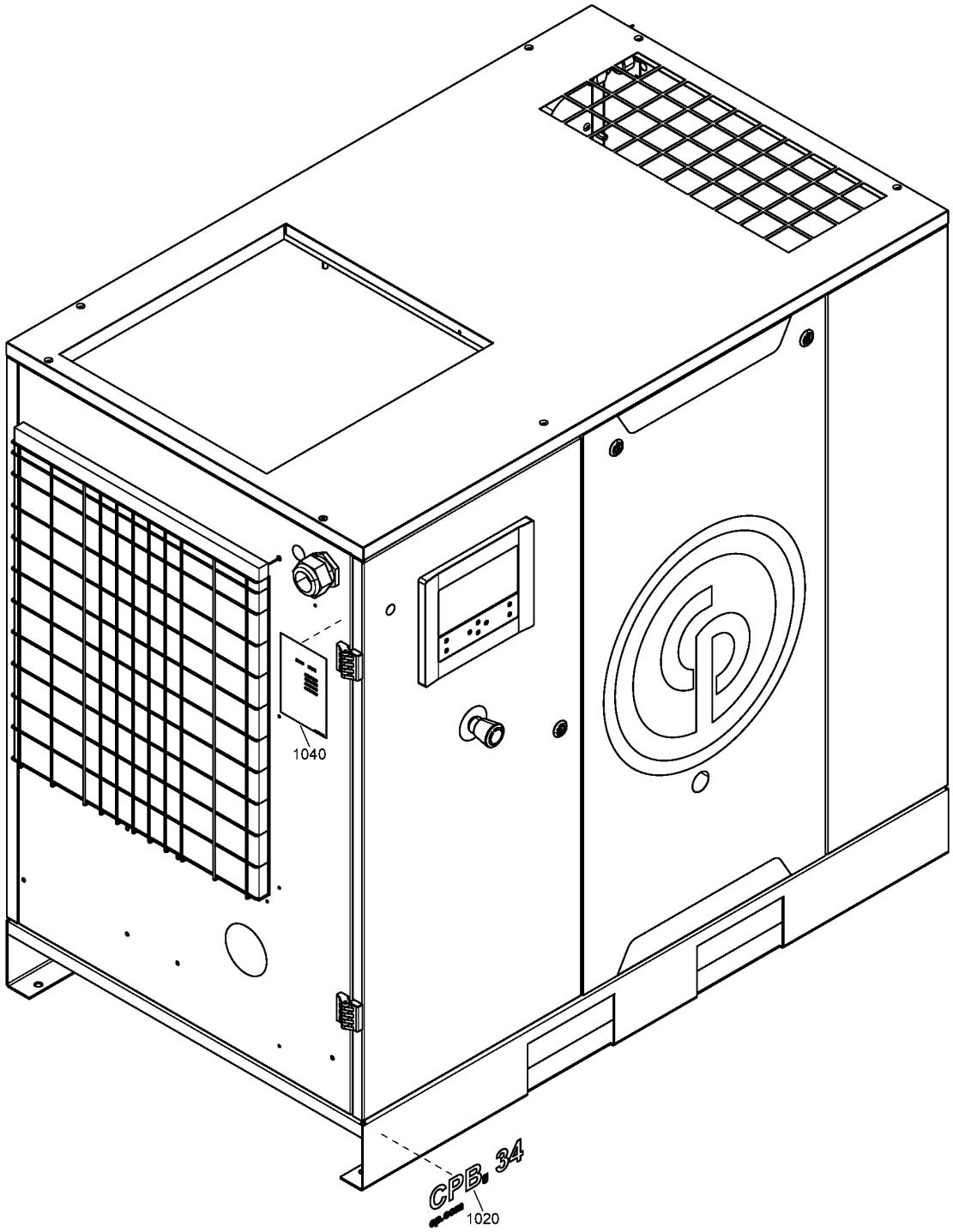

Ref	Part Number	Qty	Name	Validity
1020	2204 1304 29	1	DECAL	**(21/08/2018 - ...)** MODEL:CPBG25_18J
1020	2204 1304 31	1	DECAL	**(21/08/2018 - ...)** MODEL:CPBG34_18J
1020	2204 1304 30	1	DECAL	**(21/08/2018 - ...)** MODEL:CPBG29_18J
1020	2204 1304 28	1	DECAL	**(21/08/2018 - ...)** MODEL:CPBG20_18J
1040	2204 2175 06	1	LABEL	**(21/08/2018 - ...)** MODEL:CPBG20_18J , MODEL:CPBG25_18J
1040	2204 2175 08	1	LABEL	**(21/08/2018 - ...)** MODEL:CPBG29_18J , MODEL:CPBG34_18J

Legend:

IDRY:Y - Integrated dryer:Yes
MODEL:CPBG20_18J - Model:CPBg 20
MODEL:CPBG25_18J - Model:CPBg 25
MODEL:CPBG29_18J - Model:CPBg 29
MODEL:CPBG34_18J - Model:CPBg 34

54 - Branding CPVSd 21-34 - Without dryer

(MODEL:CPVD21_18J , MODEL:CPVD25_18J , MODEL:CPVD29_18J , MODEL:CPVD34_18J) + IDRY:N

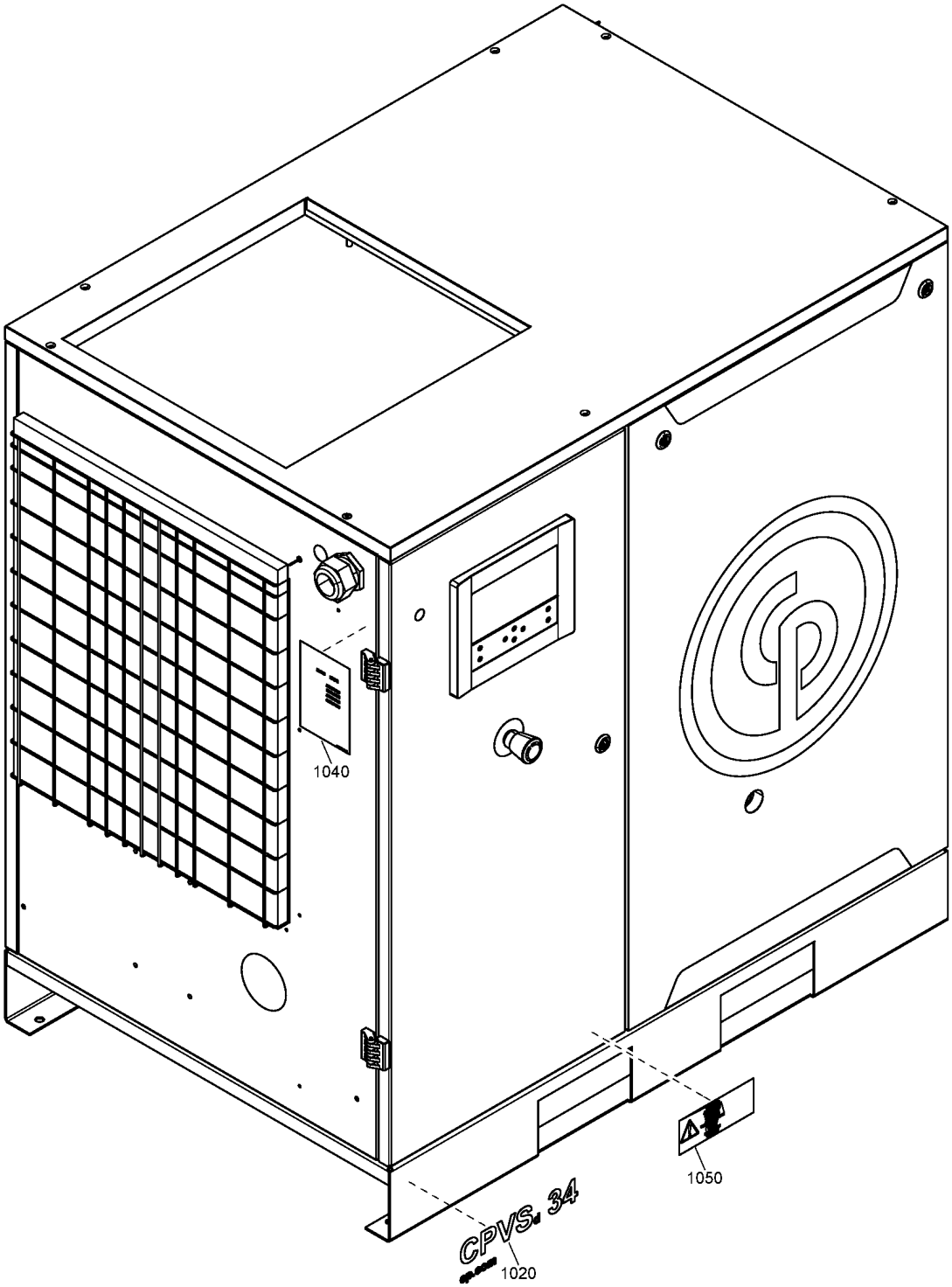

Ref	Part Number	Qty	Name	Validity
1020	2204 1304 33	1	DECAL	**(22/08/2018 - ...)** MODEL:CPVD25_18J
1020	2204 1304 35	1	DECAL	**(22/08/2018 - ...)** MODEL:CPVD34_18J
1020	2204 1304 32	1	DECAL	**(22/08/2018 - ...)** MODEL:CPVD21_18J
1020	2204 1304 34	1	DECAL	**(22/08/2018 - ...)** MODEL:CPVD29_18J
1040	2204 2175 07	1	LABEL	**(22/08/2018 - ...)** MODEL:CPVD29_18J , MODEL:CPVD34_18J
1040	2204 2175 05	1	LABEL	**(22/08/2018 - ...)** MODEL:CPVD21_18J , MODEL:CPVD25_18J
1050	2202 9404 00	1	LABEL WARNING	**(22/08/2018 - ...)**

Legend:

IDRY:N - Integrated dryer:No
MODEL:CPVD21_18J - Model:CPVSd 21
MODEL:CPVD25_18J - Model:CPVSd 25
MODEL:CPVD29_18J - Model:CPVSd 29
MODEL:CPVD34_18J - Model:CPVSd 34

55 - Branding CPVSd 21-34 - With dryer

(MODEL:CPVD21_18J , MODEL:CPVD25_18J , MODEL:CPVD29_18J , MODEL:CPVD34_18J) + IDRY:Y

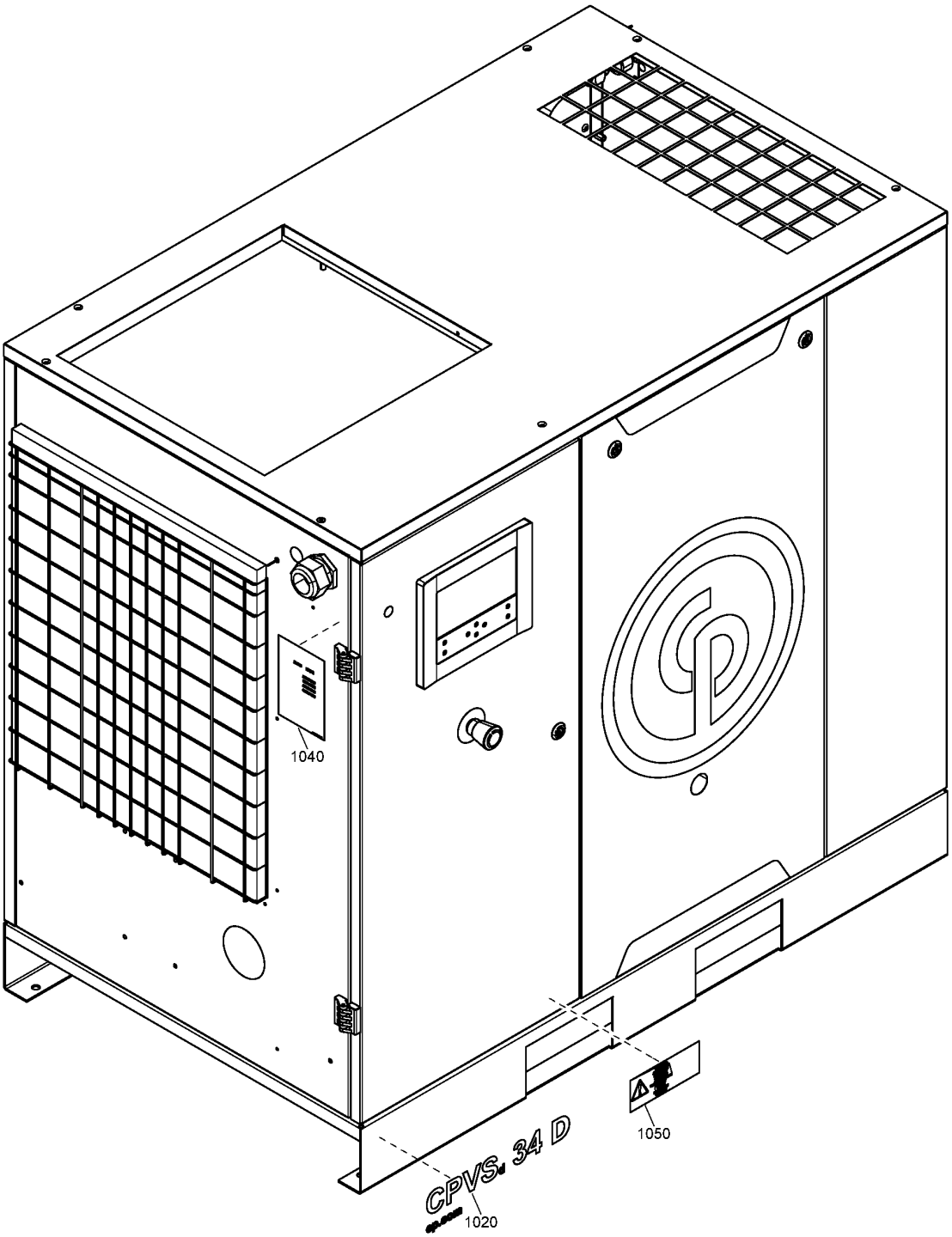

Ref	Part Number	Qty	Name	Validity
1020	2204 1304 39	1	DECAL	**(22/08/2018 - ...)** MODEL:CPVD34_18J
1020	2204 1304 37	1	DECAL	**(22/08/2018 - ...)** MODEL:CPVD25_18J
1020	2204 1304 38	1	DECAL	**(22/08/2018 - ...)** MODEL:CPVD29_18J
1020	2204 1304 36	1	DECAL	**(22/08/2018 - ...)** MODEL:CPVD21_18J
1040	2204 2175 06	1	LABEL	**(22/08/2018 - ...)** MODEL:CPVD21_18J , MODEL:CPVD25_18J
1040	2204 2175 08	1	LABEL	**(22/08/2018 - ...)** MODEL:CPVD29_18J , MODEL:CPVD34_18J
1050	2202 9404 00	1	LABEL WARNING	**(22/08/2018 - ...)**

Legend:

IDRY:Y - Integrated dryer:Yes
MODEL:CPVD21_18J - Model:CPVSd 21
MODEL:CPVD25_18J - Model:CPVSd 25
MODEL:CPVD29_18J - Model:CPVSd 29
MODEL:CPVD34_18J - Model:CPVSd 34

ORIGINAL PART

People
Passion
Performance

Chicago Pneumatic

04/04/2019
No. 2930 7170 20
www.cp.com